Geomagnetic Induced Currents – Detection, Protection, and Mitigation

Greg Zweigle

Wednesday, August 28, 2013

Copyright © SEL 2013

Detection Methods

- Indirect Detection
  - EM Field, K-Index, G-Scale
  - Possibility for early detection
  - But, must infer power system impact
- Direct Detection
  - Harmonics, temperature, reactive power, I, V
  - See exact power system signals
  - But, get little advanced warning

Copyright © SEL 2013

Direct Detection, Existing Equipment

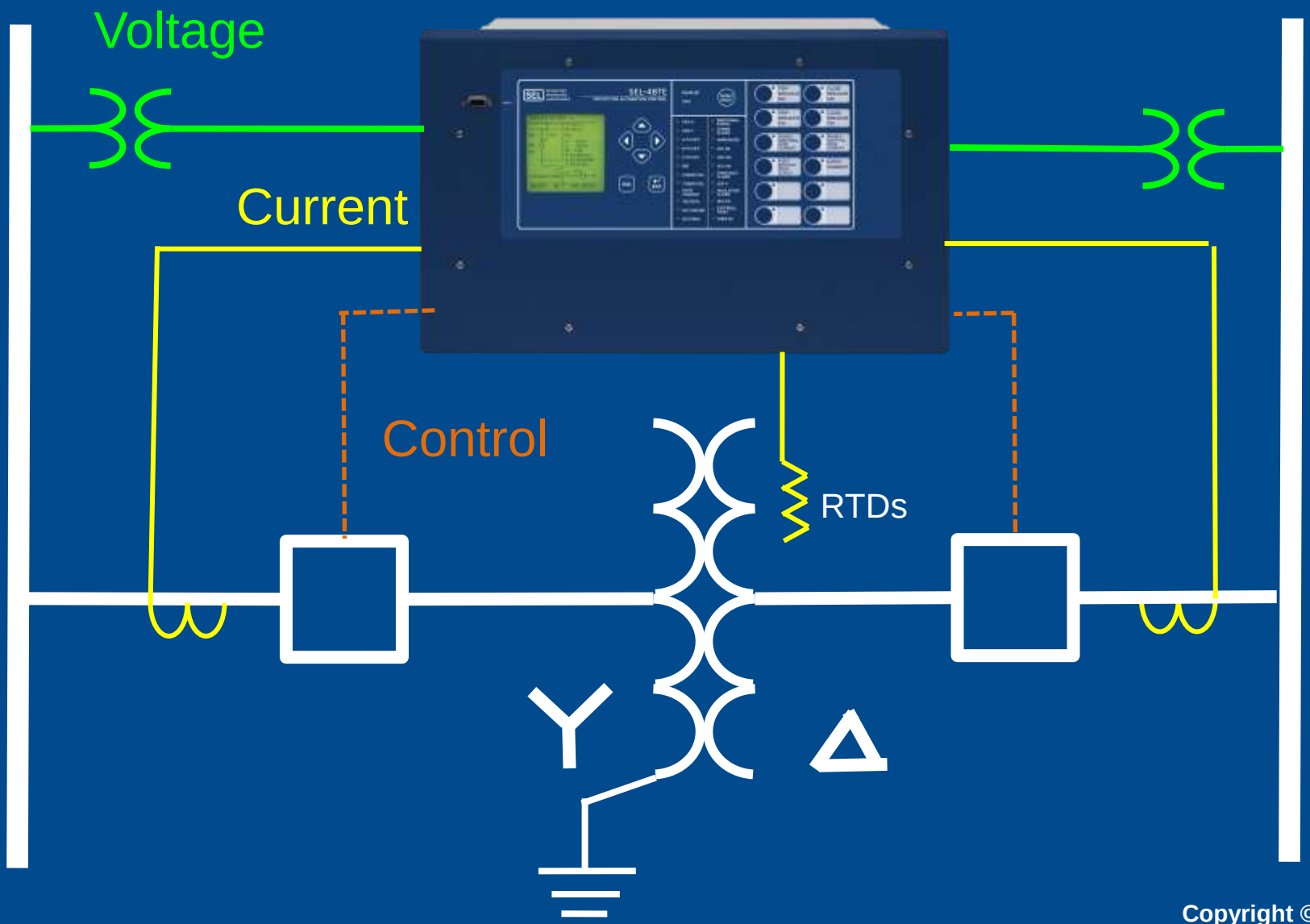

Copyright © SEL 2013

Transformer Protection Requirements

- Trip for internal faults
- Restrain for external faults
- Alarm and trip for overloads
- Monitor through-faults for damage
- Trip if over-excited or over-heated

Copyright © SEL 2013

Differential Protection Is Easy in Theory

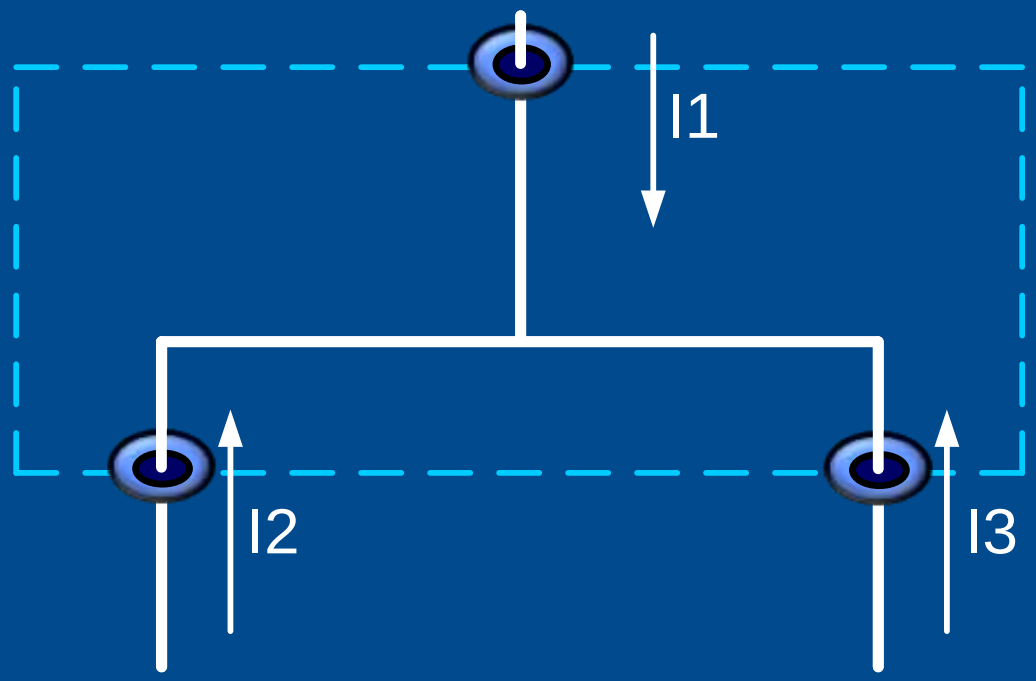

Kirchhoff's Current Law (KCL): $\sum_{k=1}^{n} I_k = 0$

Copyright © SEL 2013

Current In = Current Out

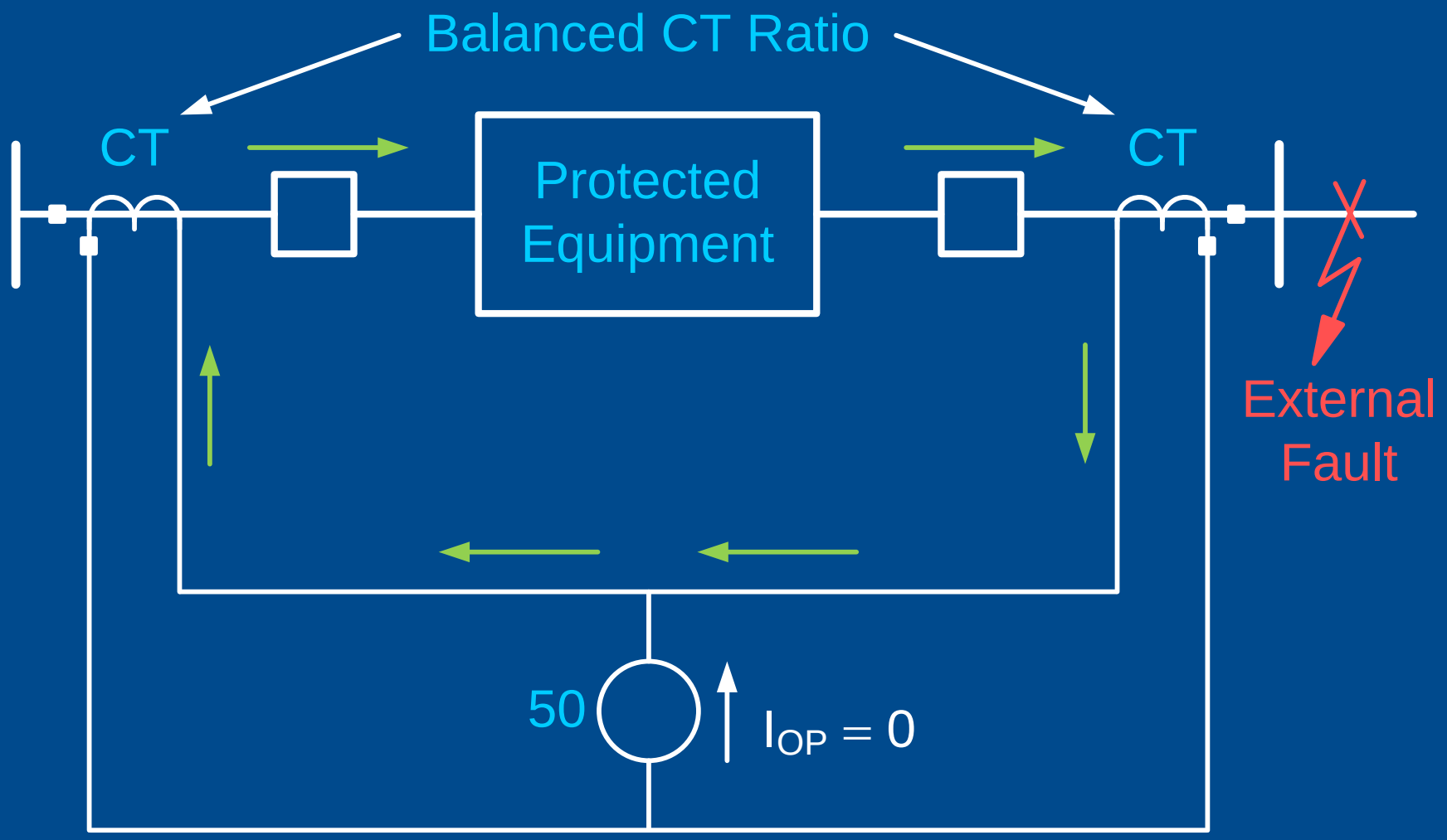

No Relay Operation if CTs Are Considered Ideal

Copyright © SEL 2013

Operate Current Flows

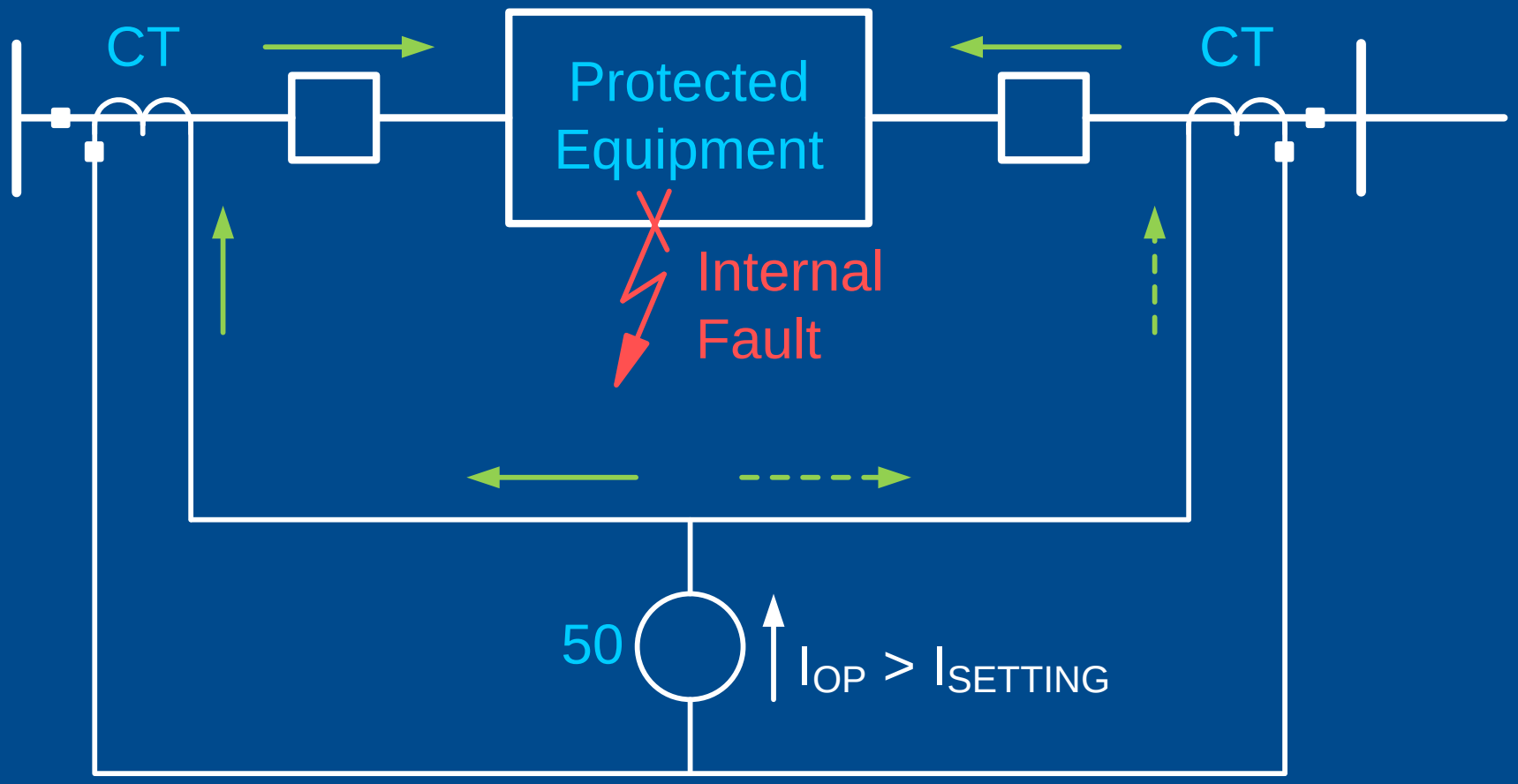

Relay Operates

Copyright © SEL 2013

What Makes Differential Protection Challenging?

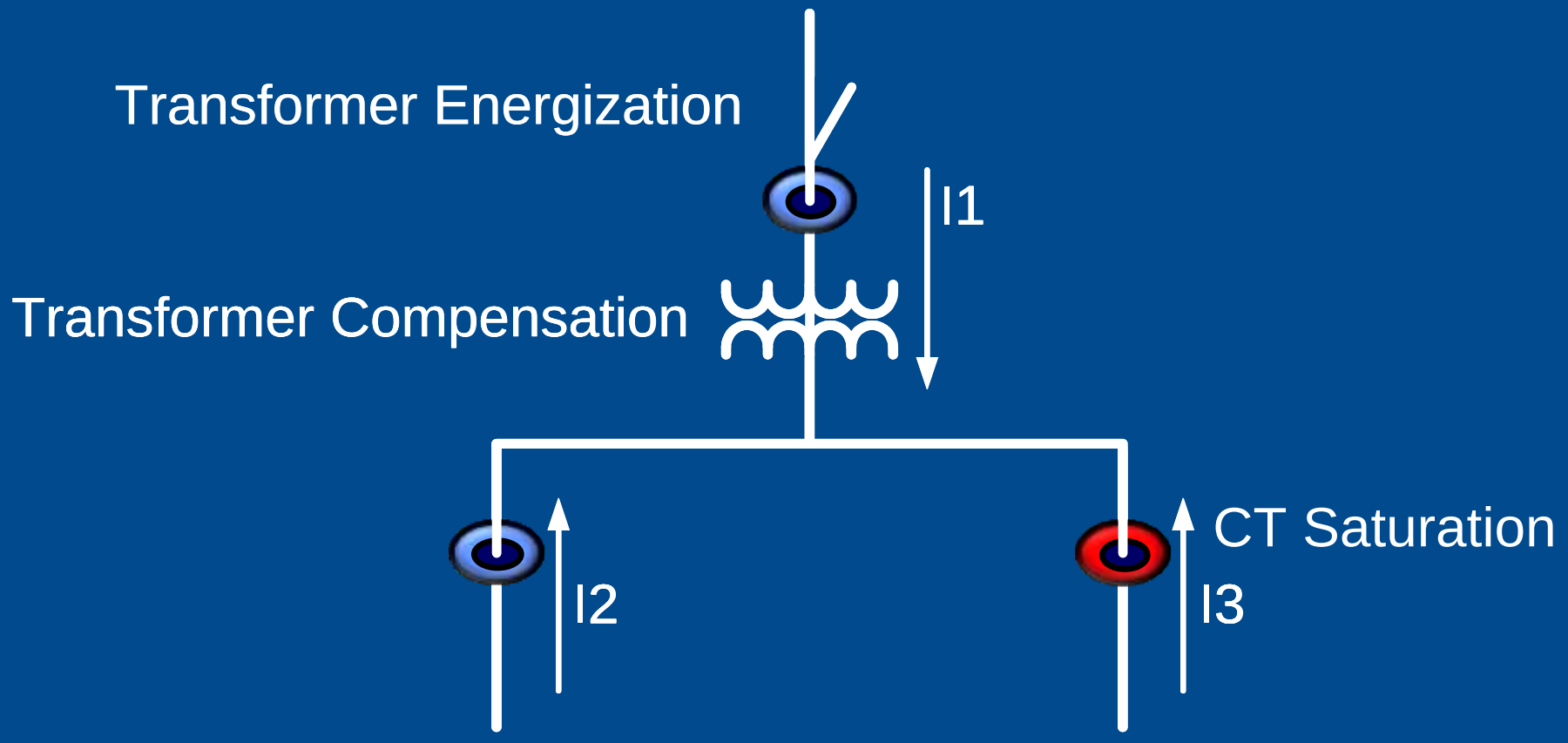

Copyright © SEL 2013

Unequal CT Performance Problems

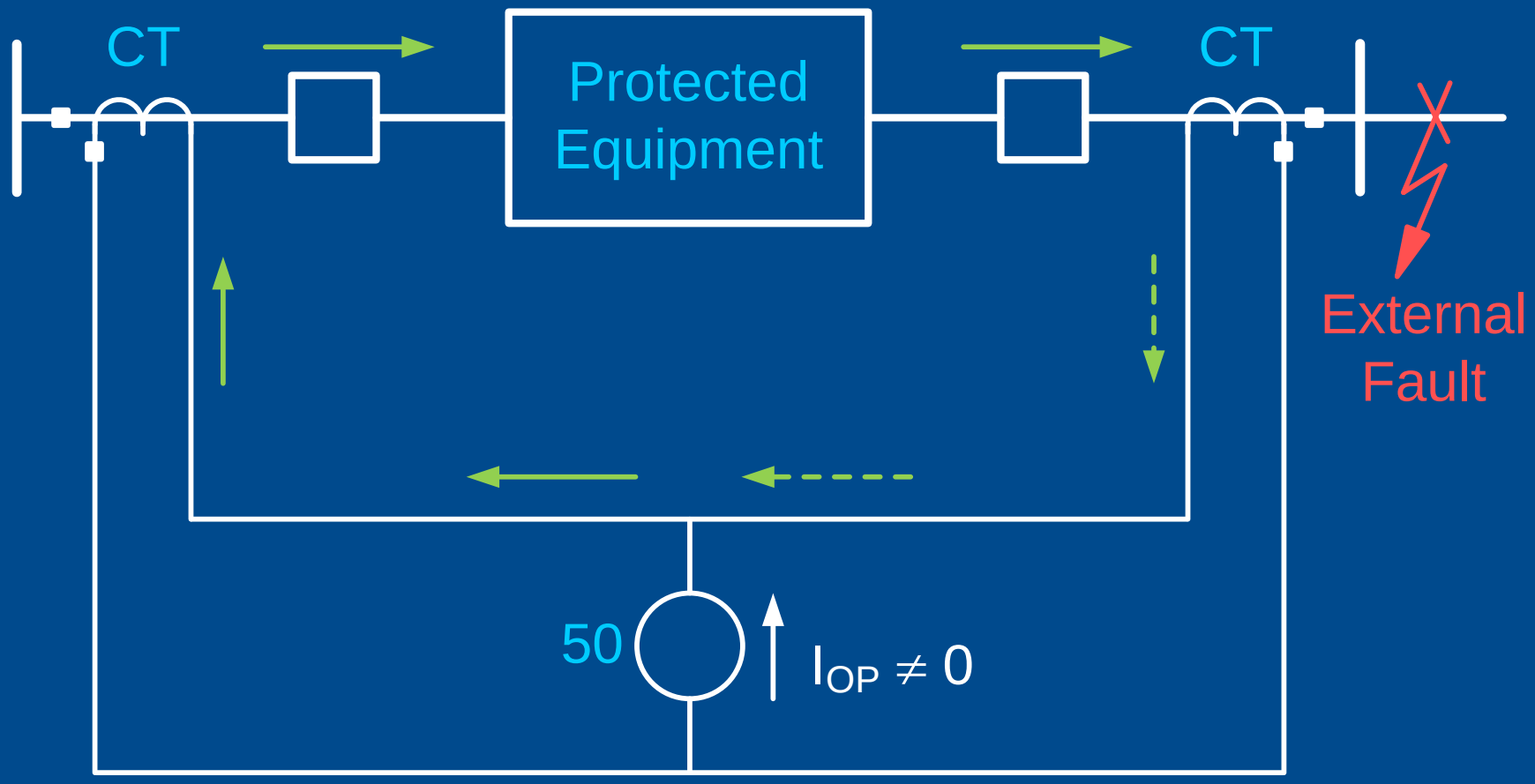

Copyright © SEL 2013

Unequal CT Saturation

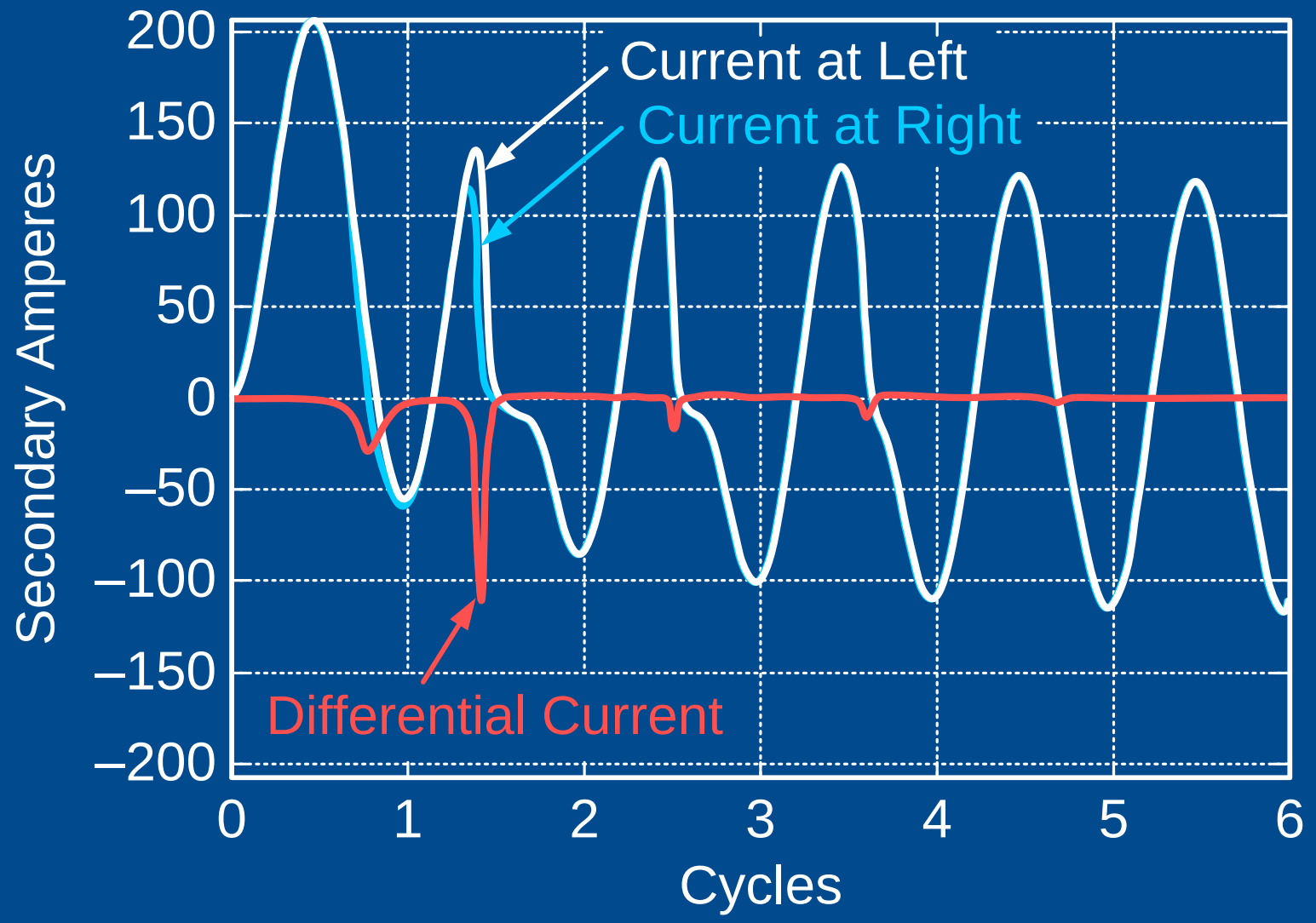

Copyright © SEL 2013

Possible Scheme – Percentage Differential Protection Principle

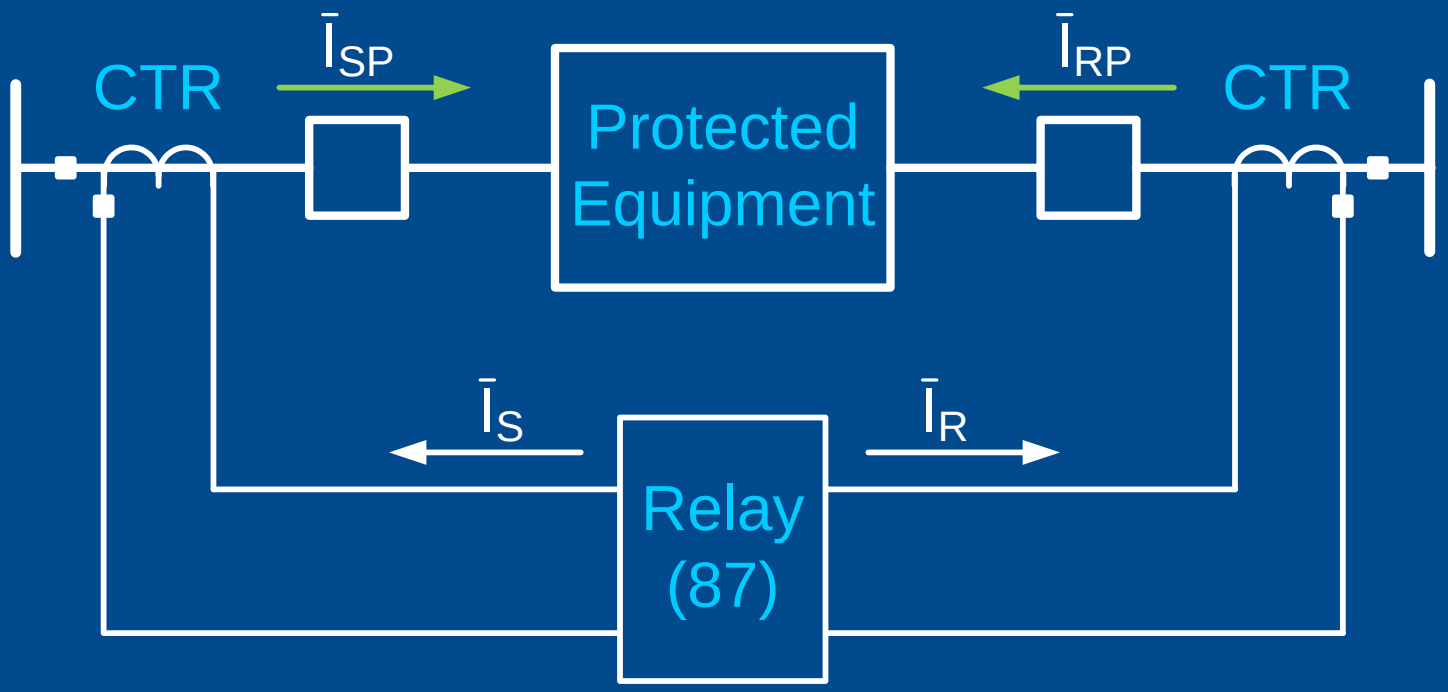

Compares:

$$\begin{cases} I_{OP} = \left|\bar{I}_S + \bar{I}_R\right| \\ k \bullet I_{RT} = k \bullet \dfrac{\left|\bar{I}_S\right| + \left|\bar{I}_R\right|}{2} \end{cases}$$

Copyright © SEL 2013

Differential Characteristic Basics

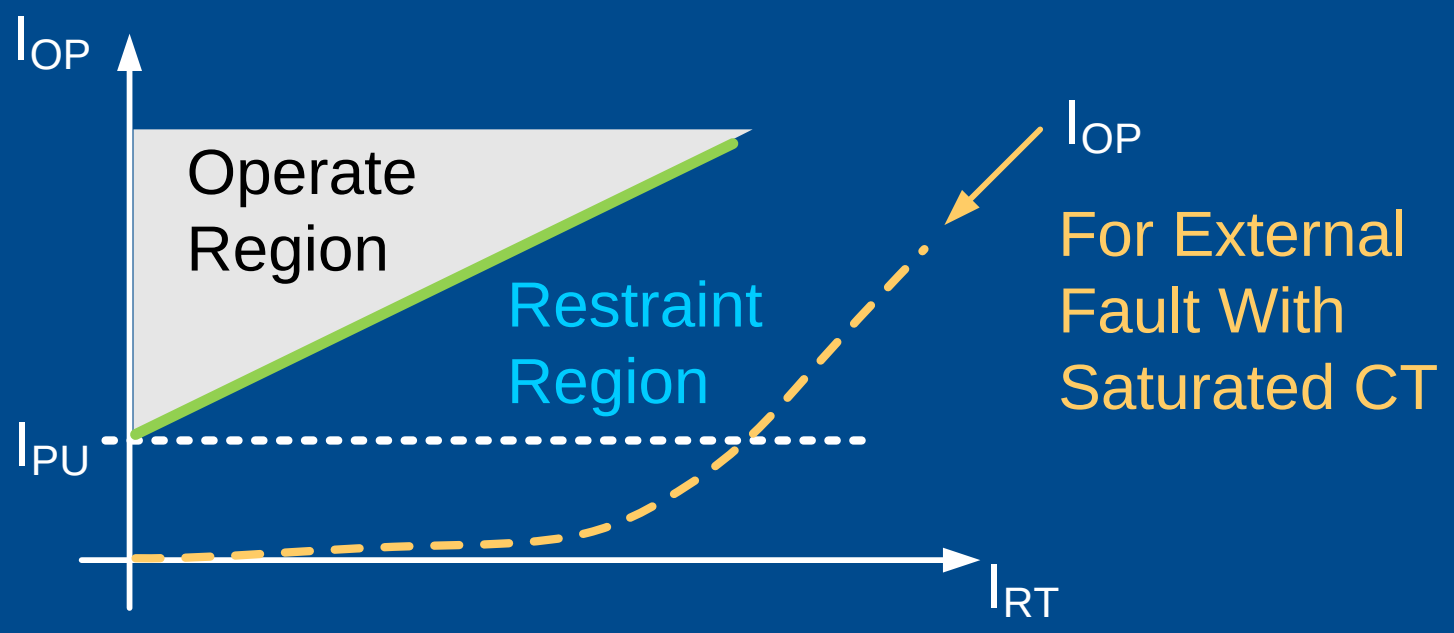

Relay Operates When:

$$|I_{OP}| \geq k \bullet I_{RT} + I_{PU}$$

Copyright © SEL 2013

Percentage Differential Relays

I_{OP} Versus I_{RT}

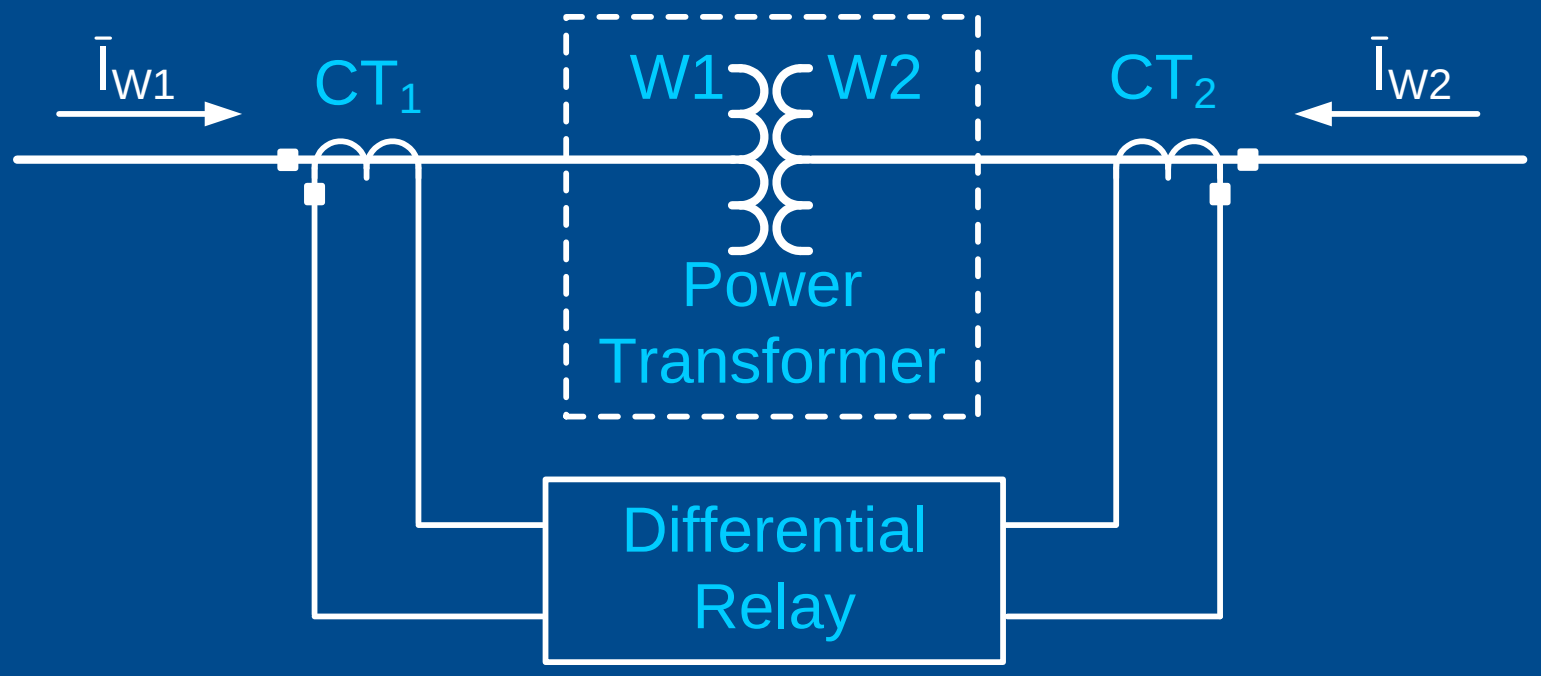

Copyright © SEL 2013

Dual-Slope Characteristic

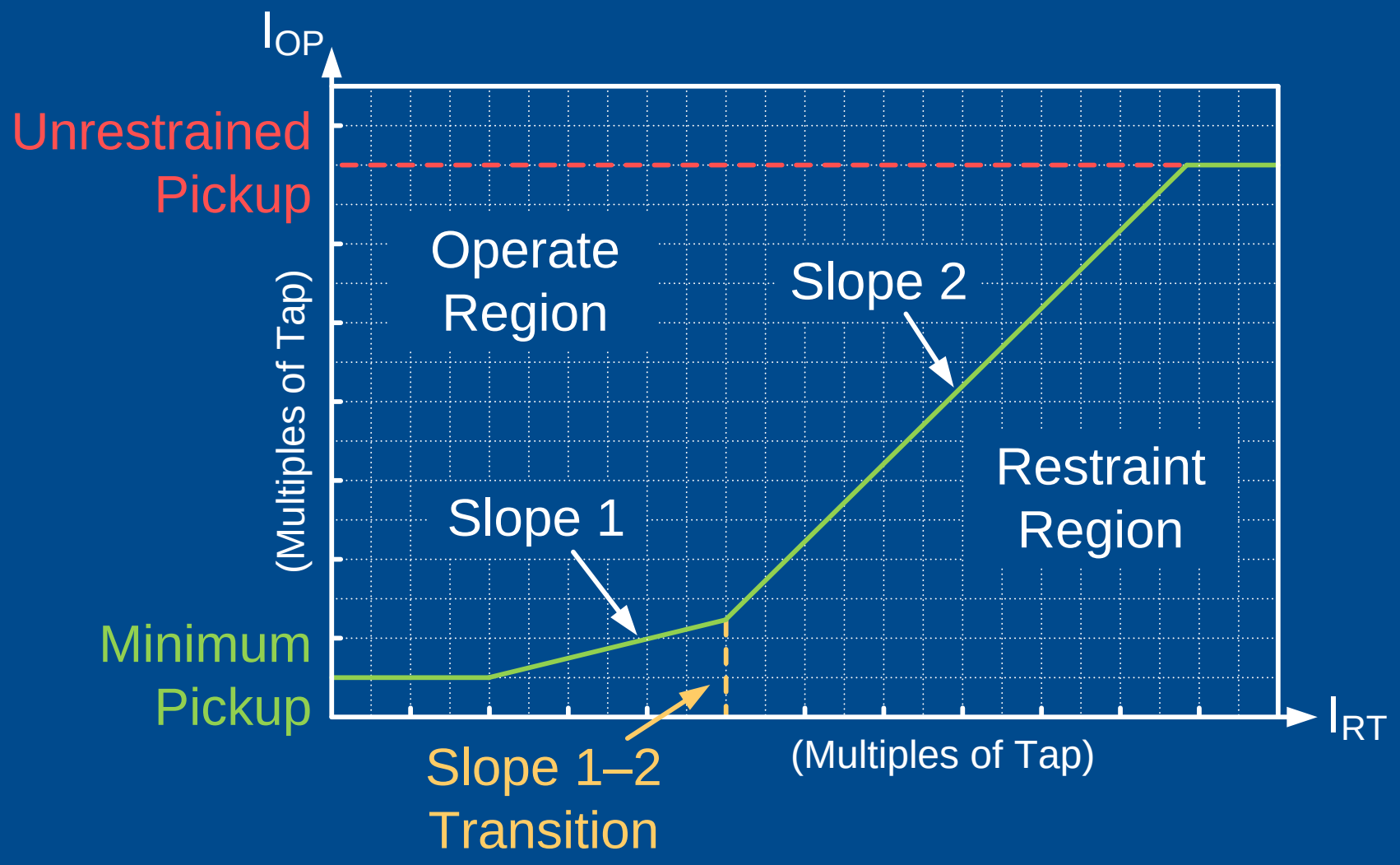

Copyright © SEL 2013

SEL-387 / SEL-787 Logic

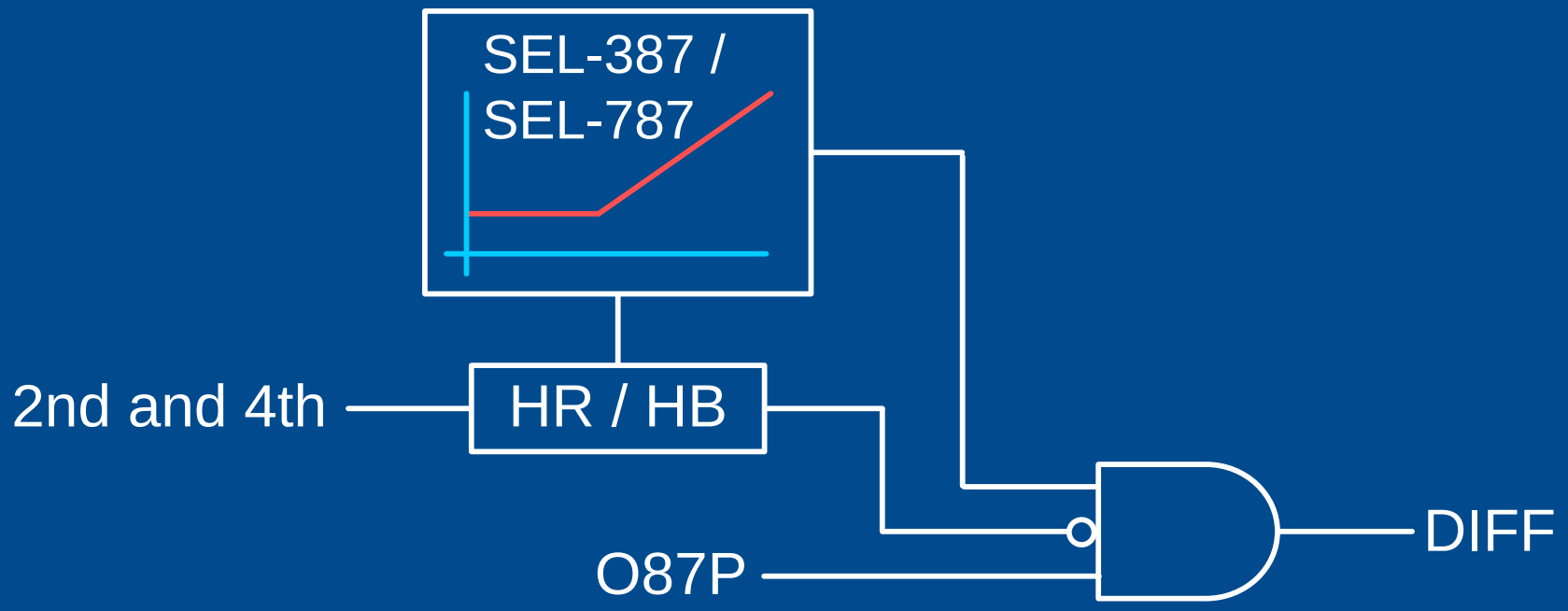

Copyright © SEL 2013

Phase C Inrush Current Obtained From Transformer Testing

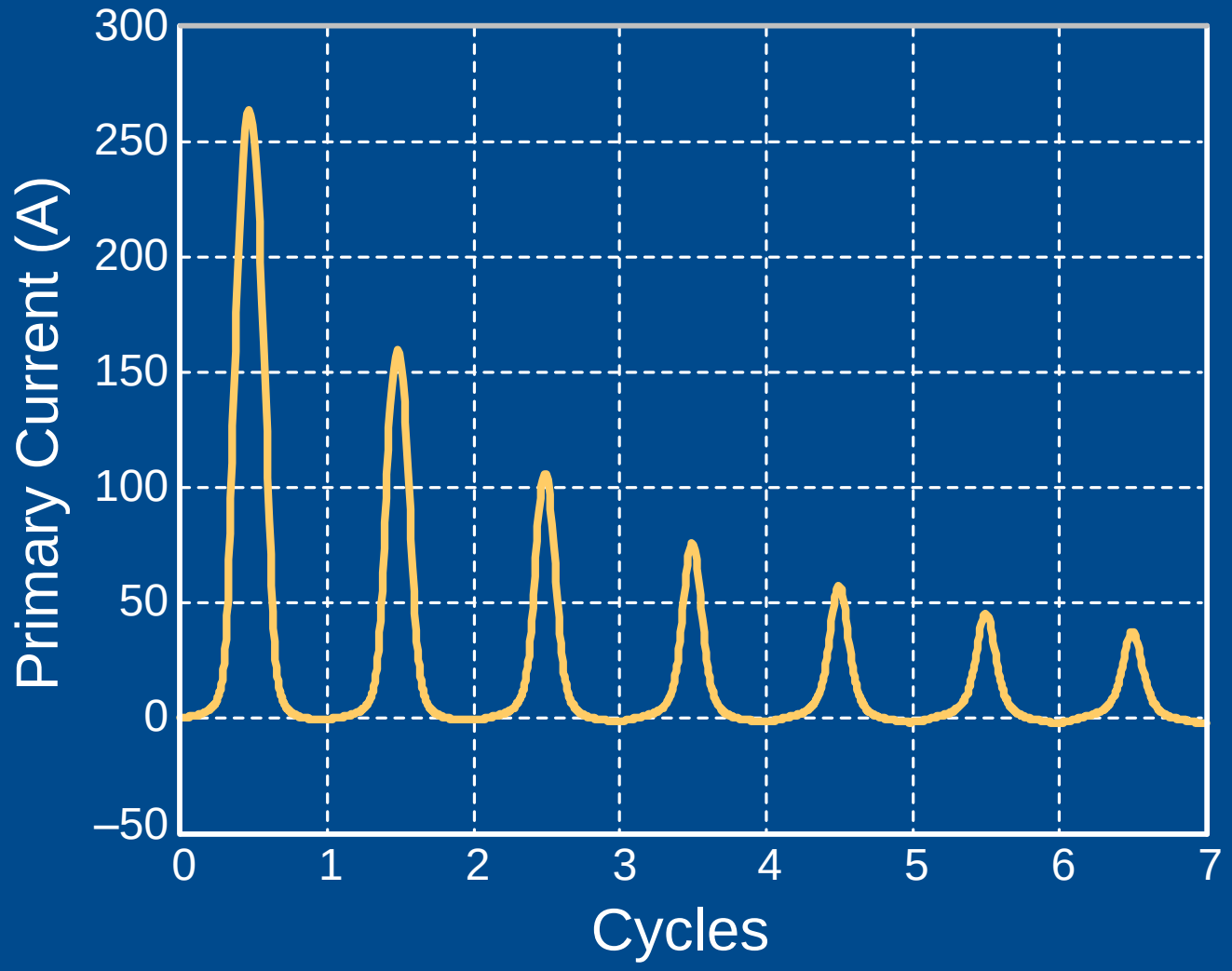

Copyright © SEL 2013

Inrush Current Has High Second Harmonic

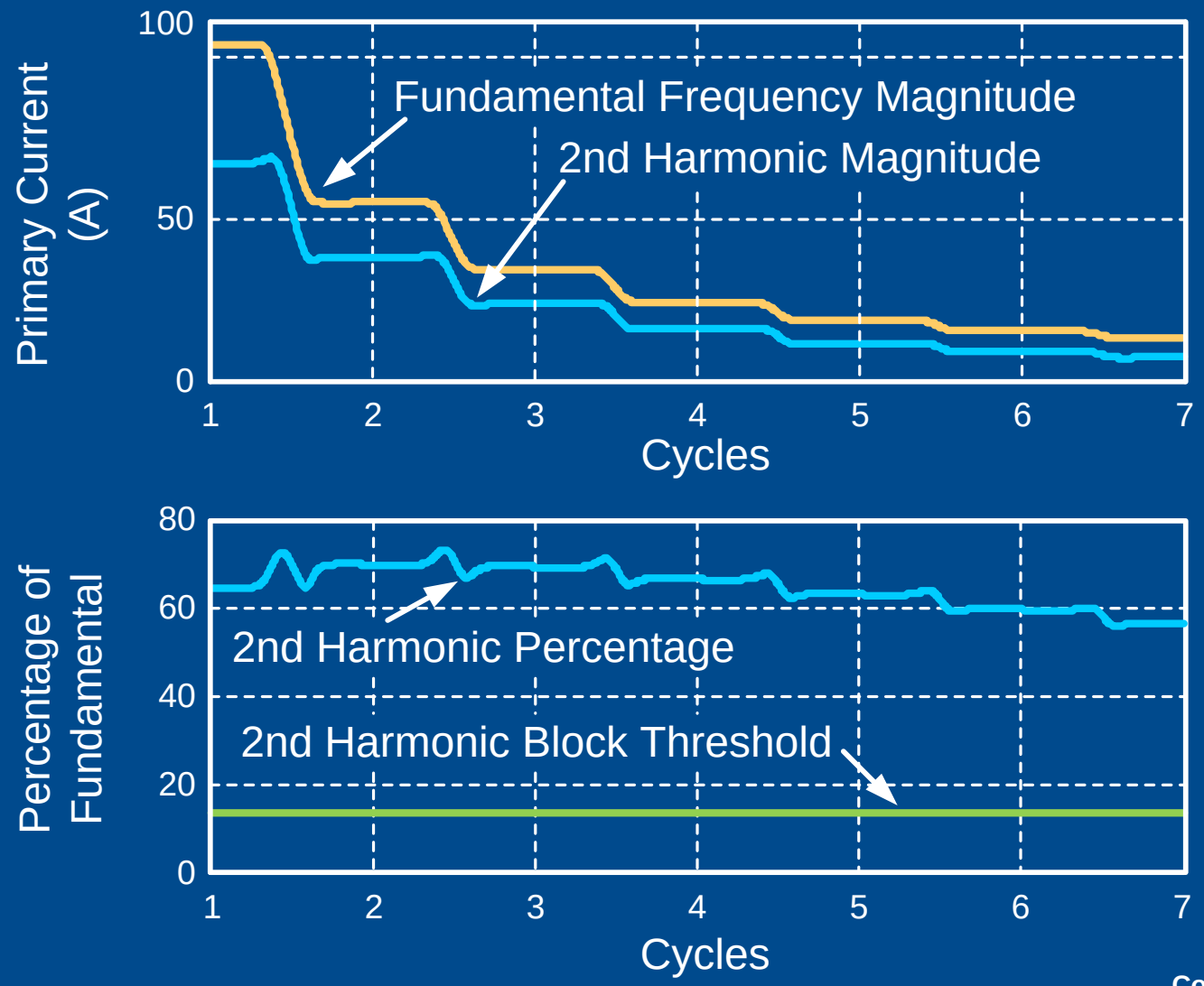

Copyright © SEL 2013

Inrush Conditions – Blocking

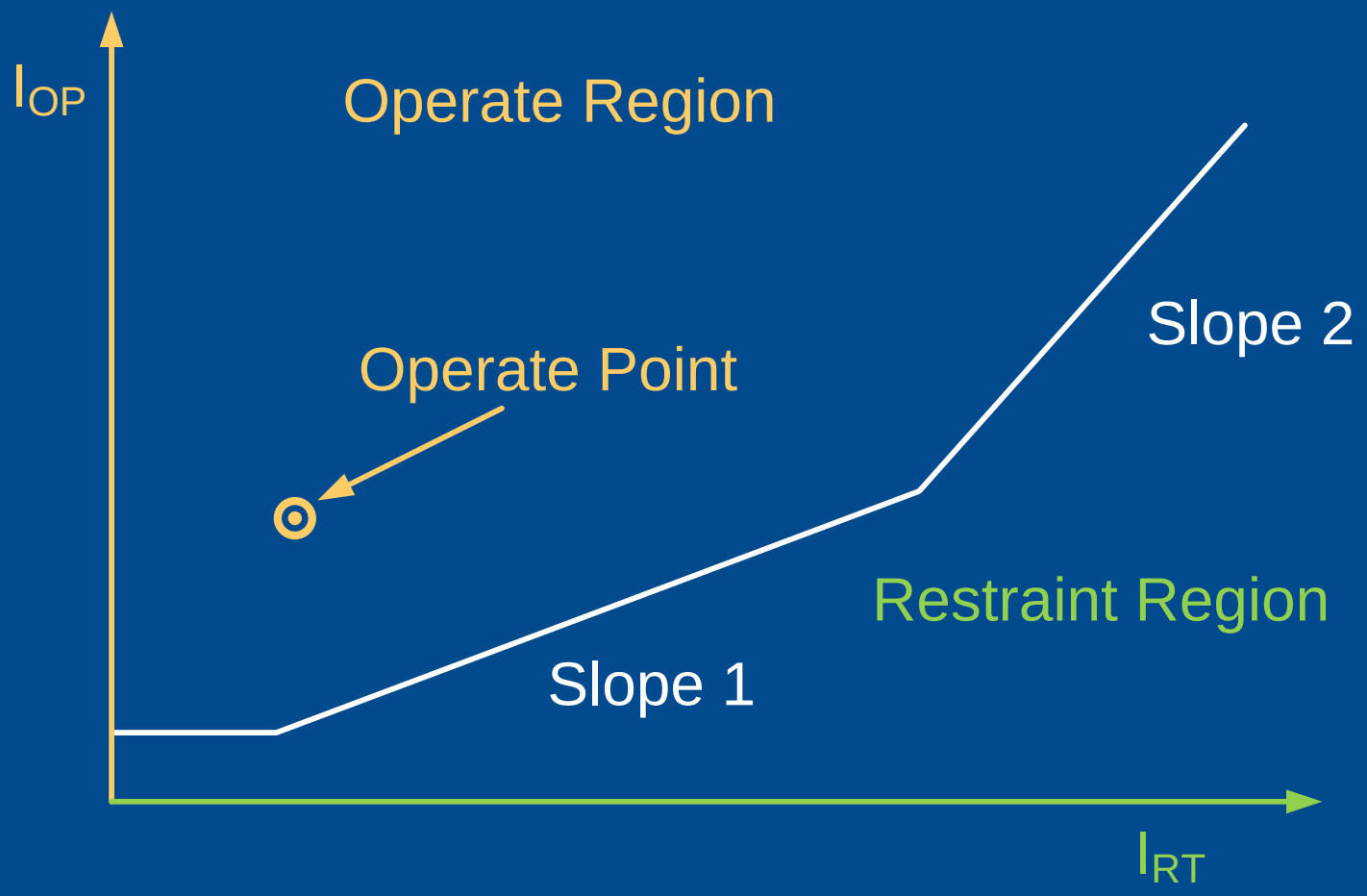

Copyright © SEL 2013

Inrush Conditions – Restraint

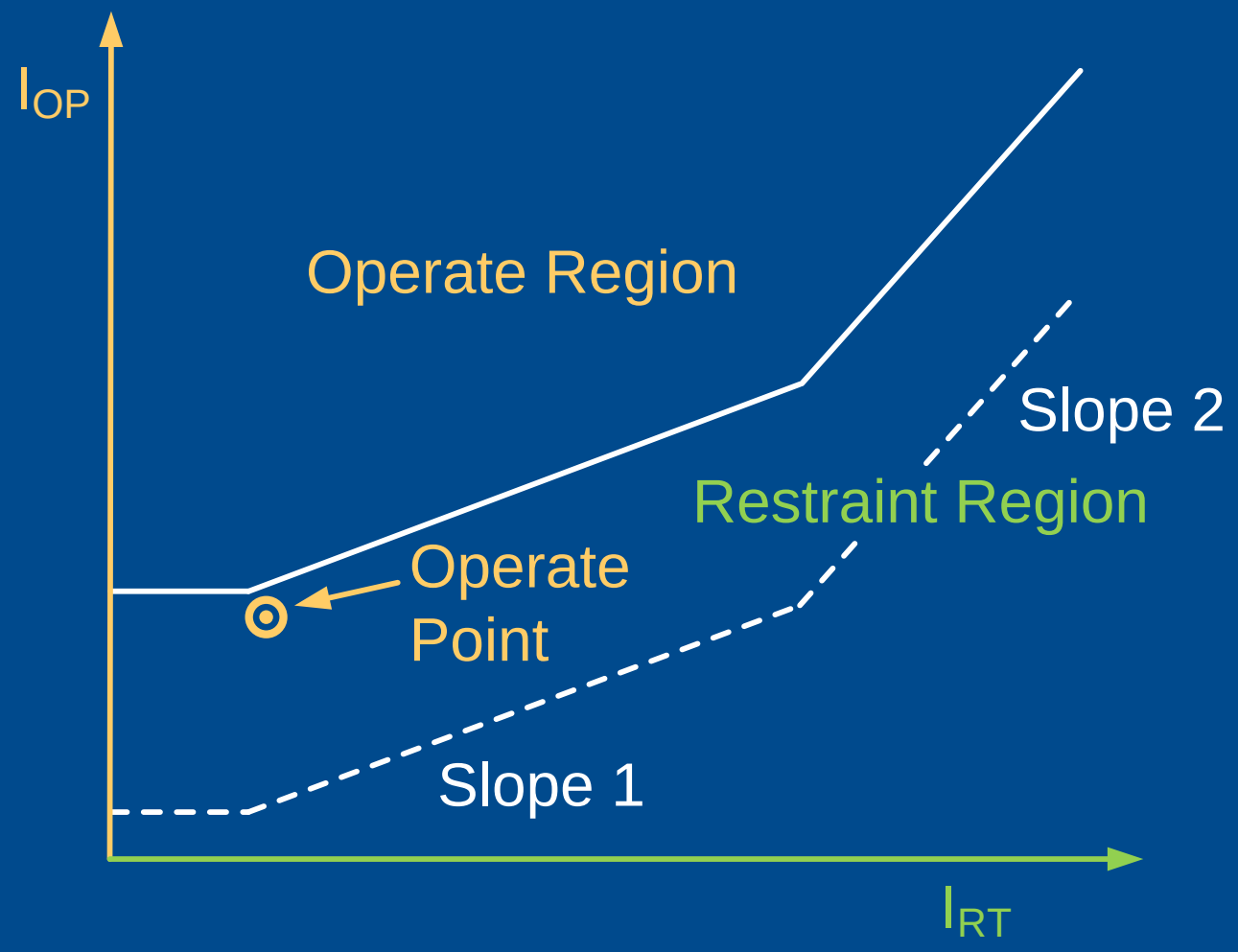

Copyright © SEL 2013

Normal Magnetizing Current

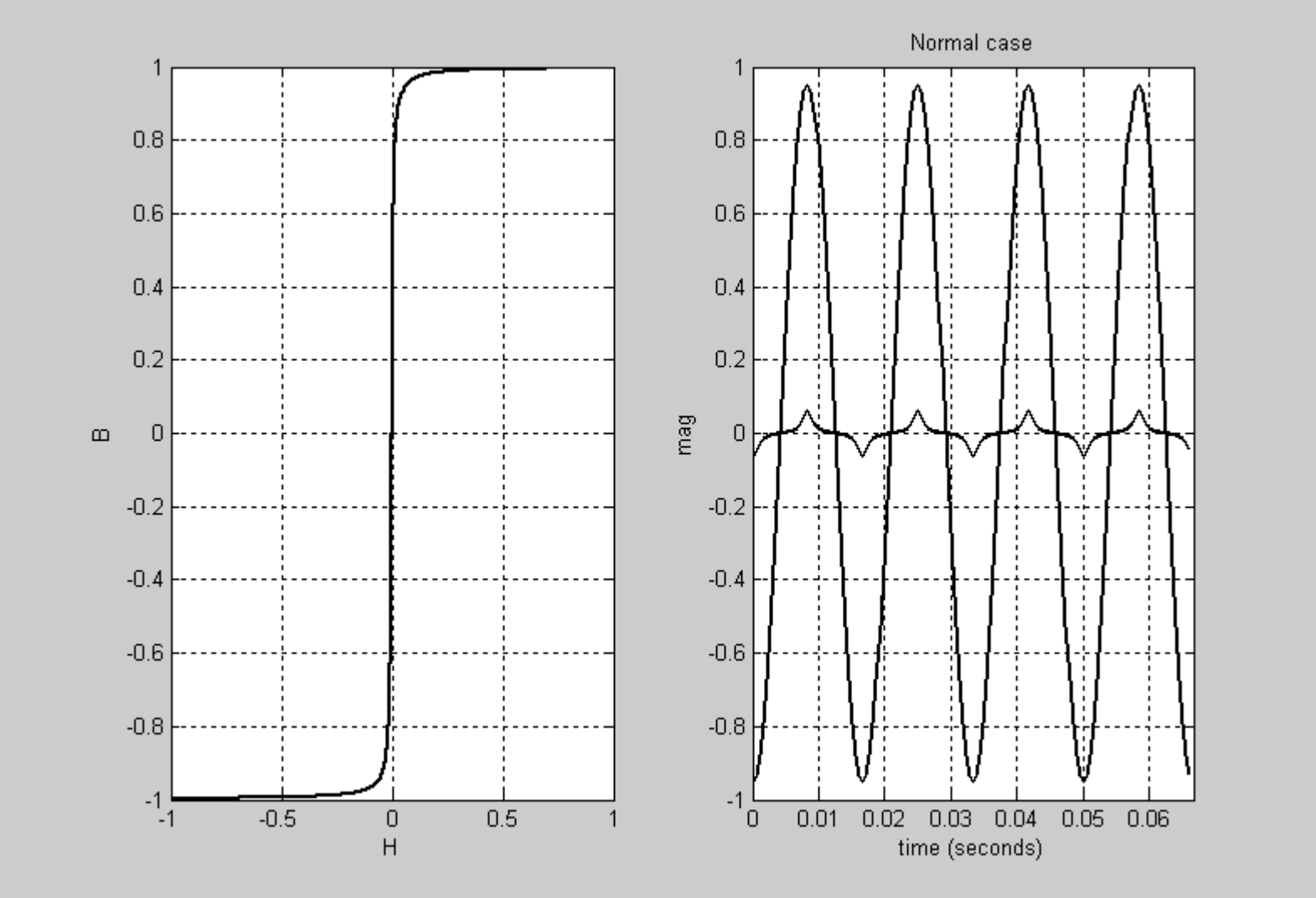

Copyright © SEL 2013

Magnetizing Current Under GIC

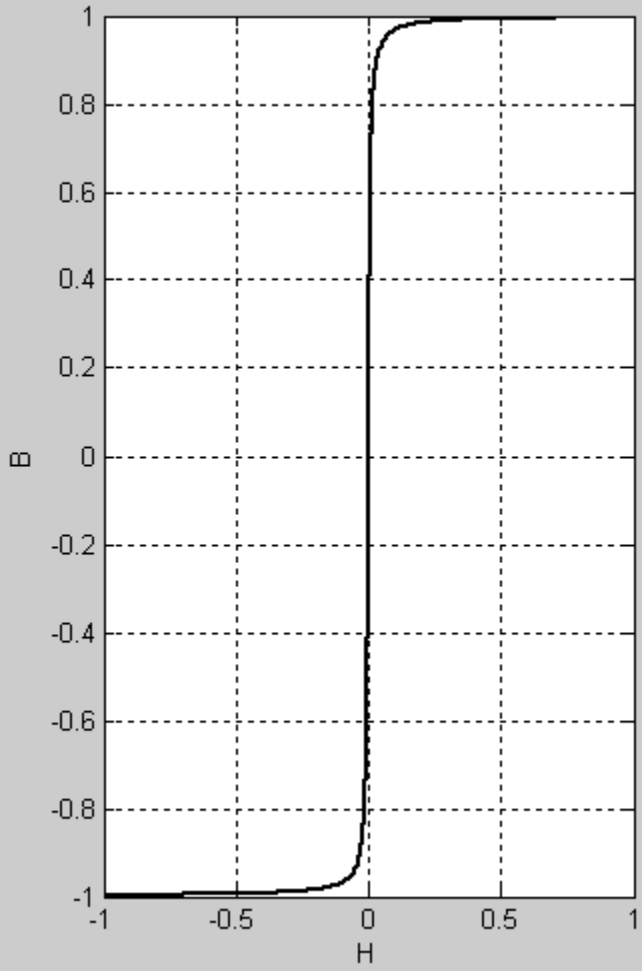

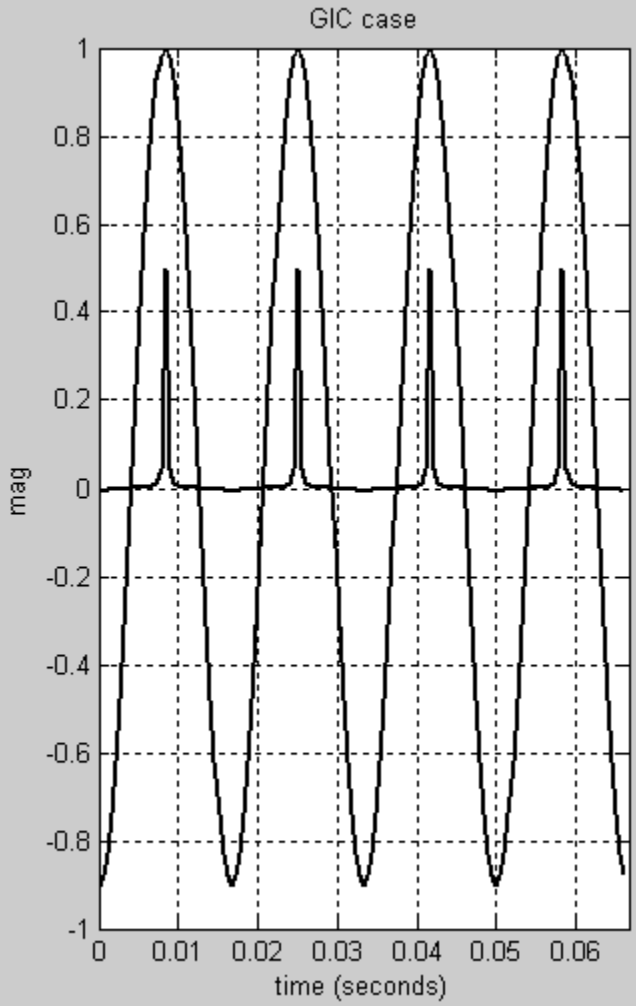

Copyright © SEL 2013

Normal vs. GIC Harmonic Content

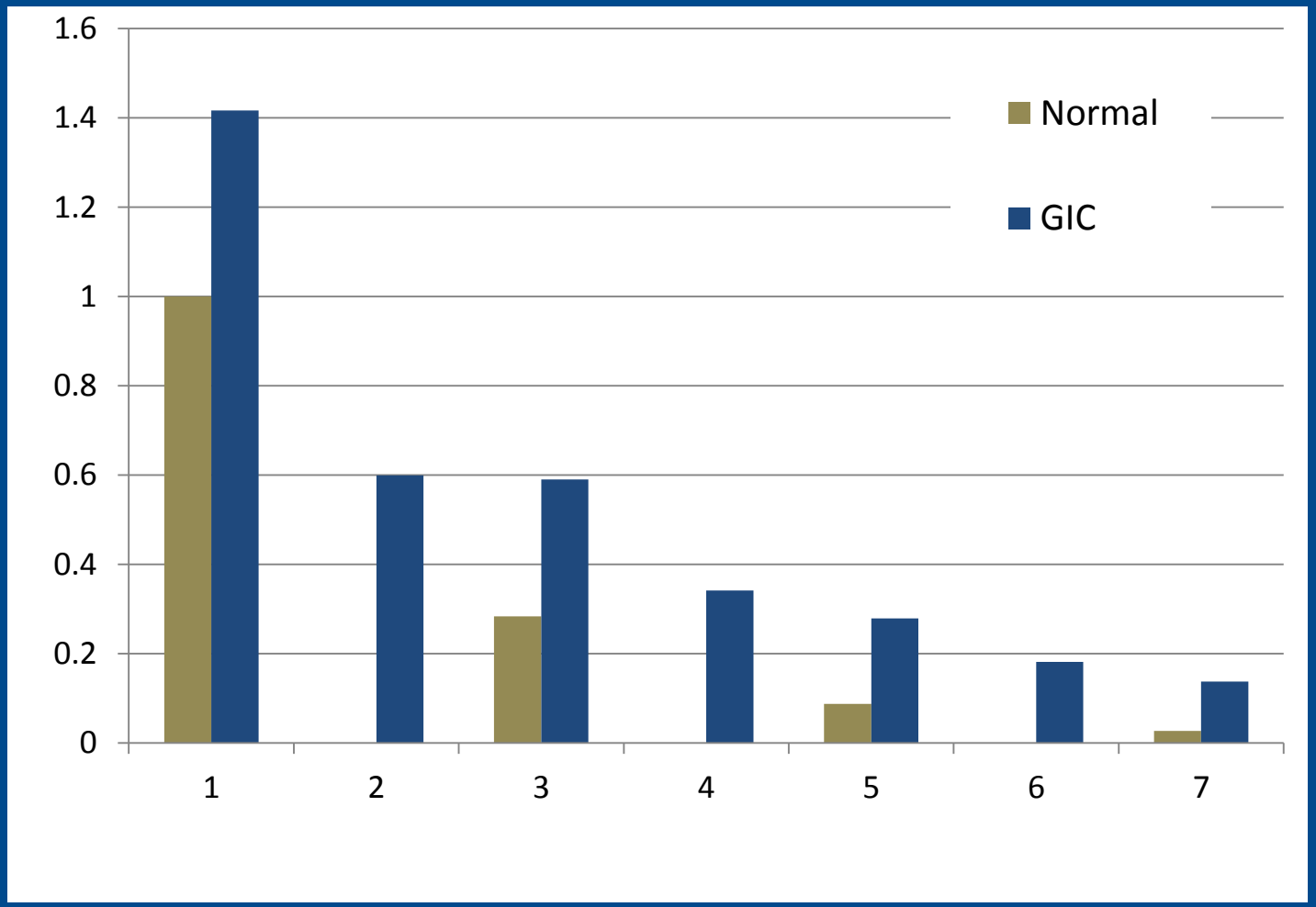

Copyright © SEL 2013

Harmonic Calculations For Protection

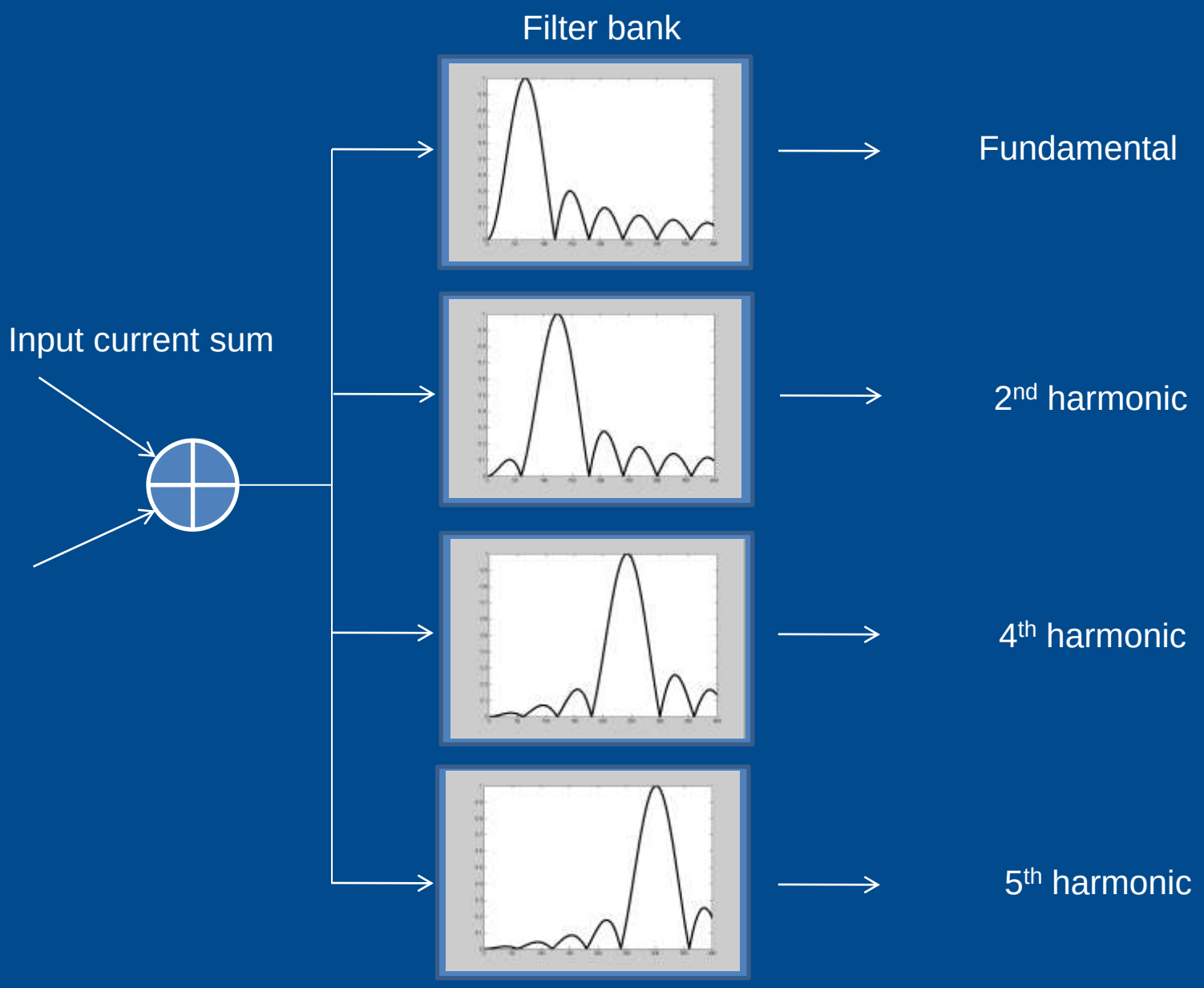

Copyright © SEL 2013

Normal Conditions

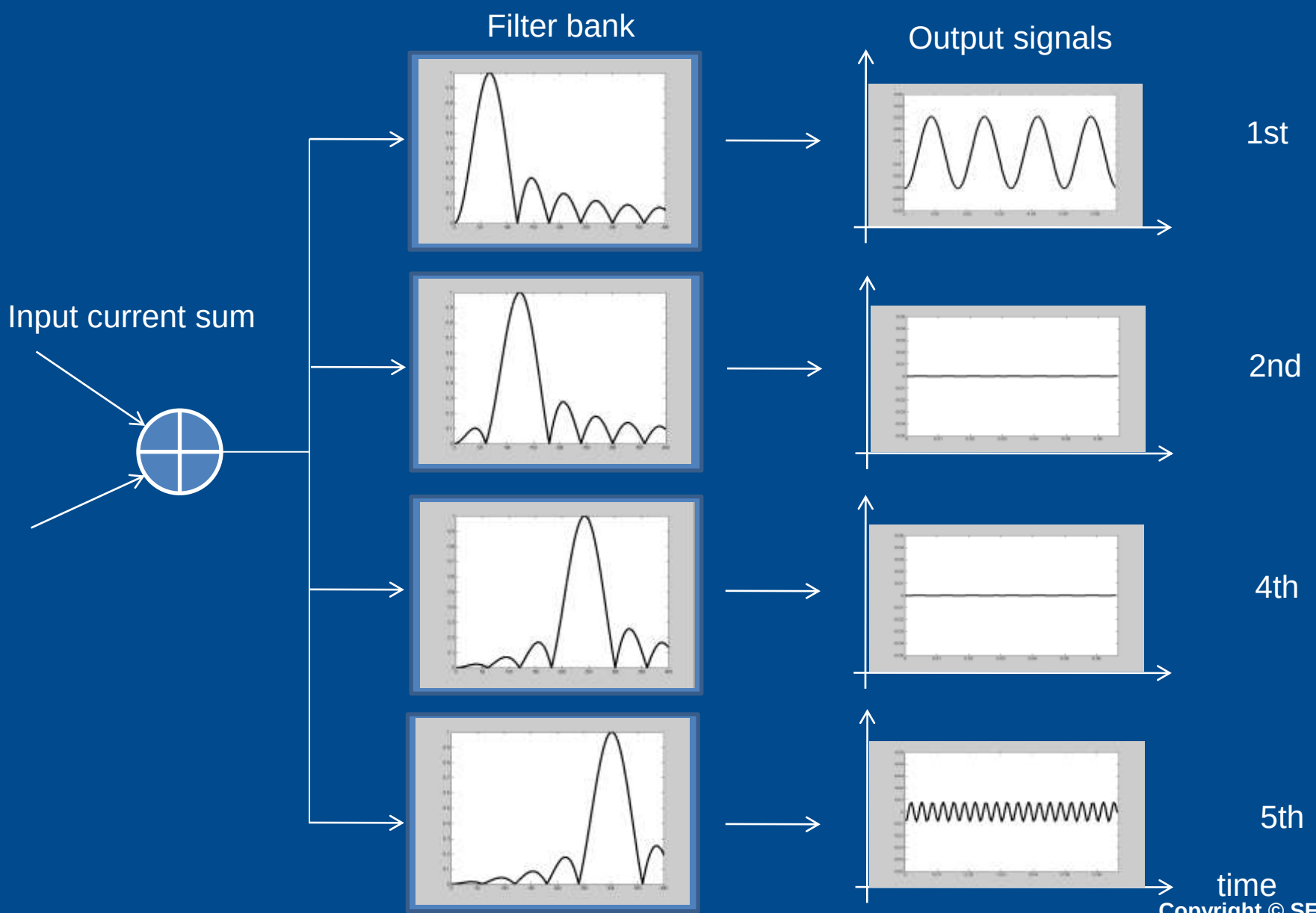

Copyright © SEL 2013

Inrush AND GIC Conditions

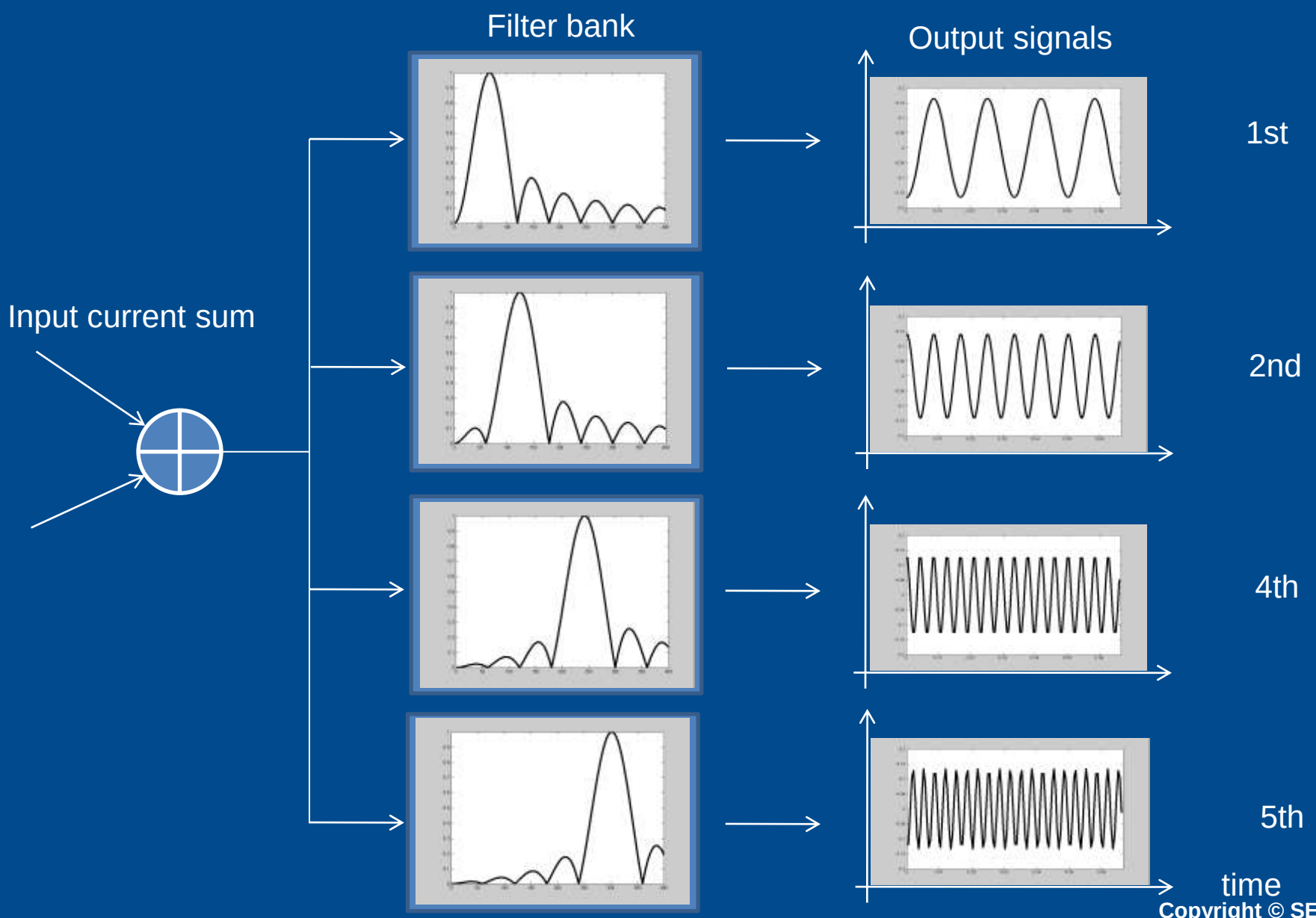

Copyright © SEL 2013

Relays Report Differential Harmonics

```
=>>MET DIF <Enter>

Relay 1                                        Date: 04/12/2008  Time: 06:06:31.366
Station A                                      Serial Number: 2008030645


Operate Currents (per unit)        Restraint Currents (per unit)
IOPA       IOPB       IOPC          IRTA       IRTB       IRTC
 1.32       1.32       1.32          3.91       3.91       3.91

2nd Harmonic Currents (percentage of IOPA, IOPB, IOPC)
IOPAF2     IOPBF2     IOPCF2
 0.08       0.09       0.01

4th Harmonic Currents (percentage of IOPA, IOPB, IOPC)
IOPAF4     IOPBF4     IOPCF4
 0.05       0.10       0.06

5th Harmonic Currents (percentage of IOPA, IOPB, IOPC)
IOPAF5     IOPBF5     IOPCF5
 0.06       0.11       0.04

Enabled Windings:  S, T
```

Copyright © SEL 2013

Inrush vs. GIC and Harmonics

- Inrush Characteristics
  - Decreases with time
  - Relative fast rate of change (< 1 second)
- GIC Characteristics
  - May increase with time
  - Relatively slow

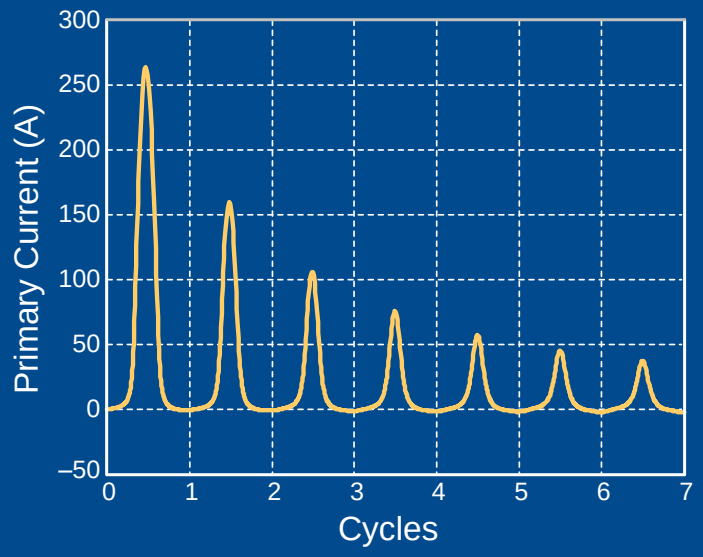

Copyright © SEL 2013

Other Relays Also Can Help

Power Quality Meters

Line Current Differential Relays

Copyright © SEL 2013

Many Relays Calculate THD

$$xxxTHD = \left(\sqrt{\left(\frac{xxx_RMS}{xxx1} \right)^2 - 1} \right) \bullet 100$$

Copyright © SEL 2013

SELogic To Get THD Values

```
#A PHASE VOLTAGE THD CALCULATION
PLT01S := VAYRC > 1.000000  # RMS VOLTAGE GREATER THAN 1.0 KV PRIMARY
PLT01R := VAYRC <= 1.000000 # CLEAR LATCH IF LESS THAN 1.0 KV PRIMARY
PMV01 := SQRT((VAYRC / VAYFMC) * (VAYRC / VAYFMC) - 1.000000) * 100.000000 * PLT01 #PERCENT THD
PHASE A VOLTAGE
#
# A PHASE CURRENT THD CALCULATION
PLT02S := IAWRC > 10.000000 # RMS CURRENT GREATER THAN 10.00A PRIMARY
PLT02R := IAWRC > 10.000000 # CLEAR LATCH IF LESS THAN 10.00A PRIMARY
PMV02 := SQRT((IAWRC / IAWFMC) * (IAWRC / IAWFMC) - 1.000000) * 100.000000 * PLT02 #PERCENT THD
PHASE A CURRENT
```

Copyright © SEL 2013

What About Synchrophasors?

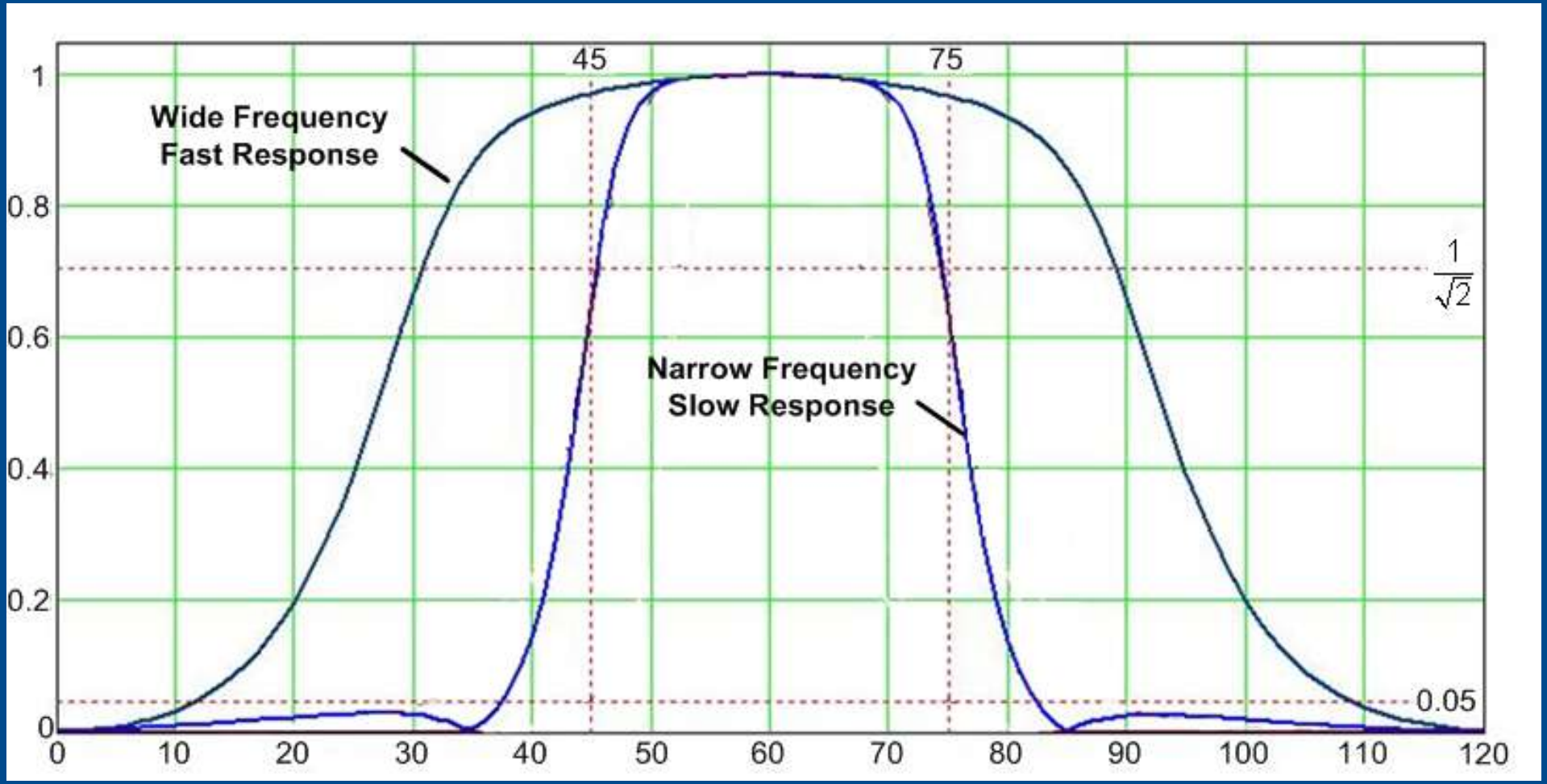

Copyright © SEL 2013

Local Detection Logic - Example

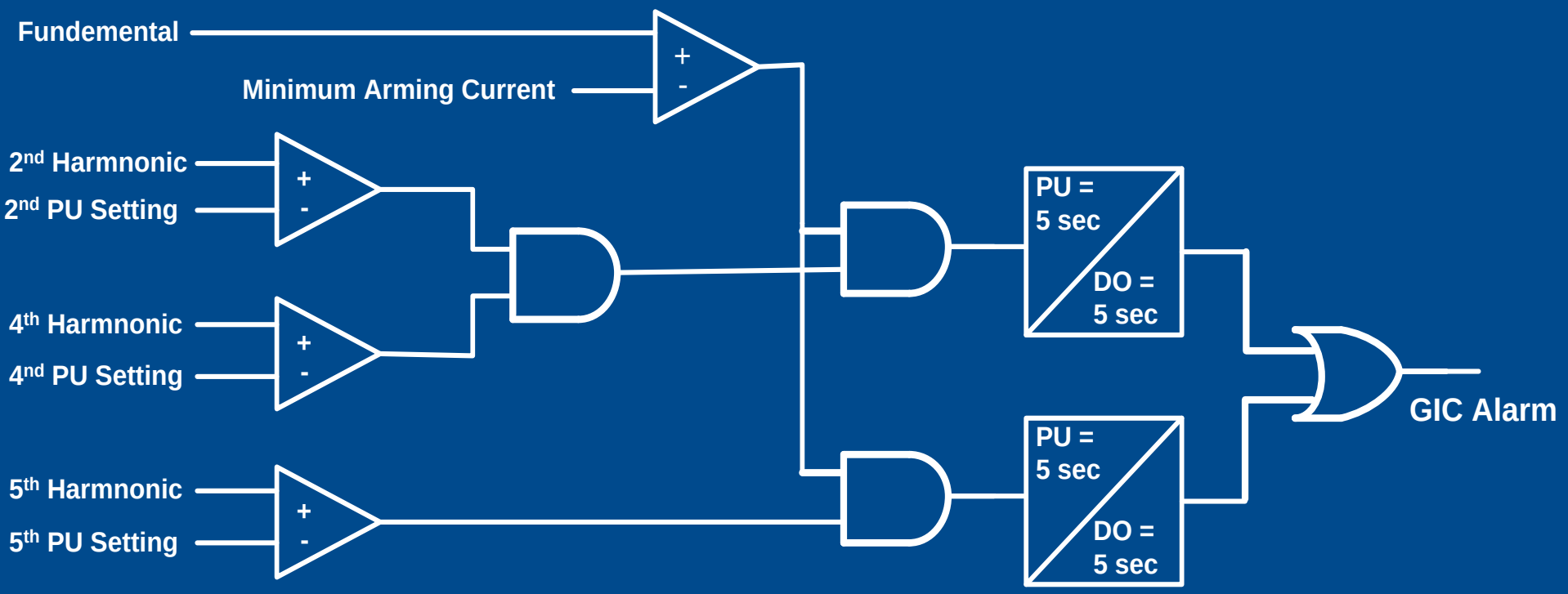

Copyright © SEL 2013

Wide Area GIC Notification

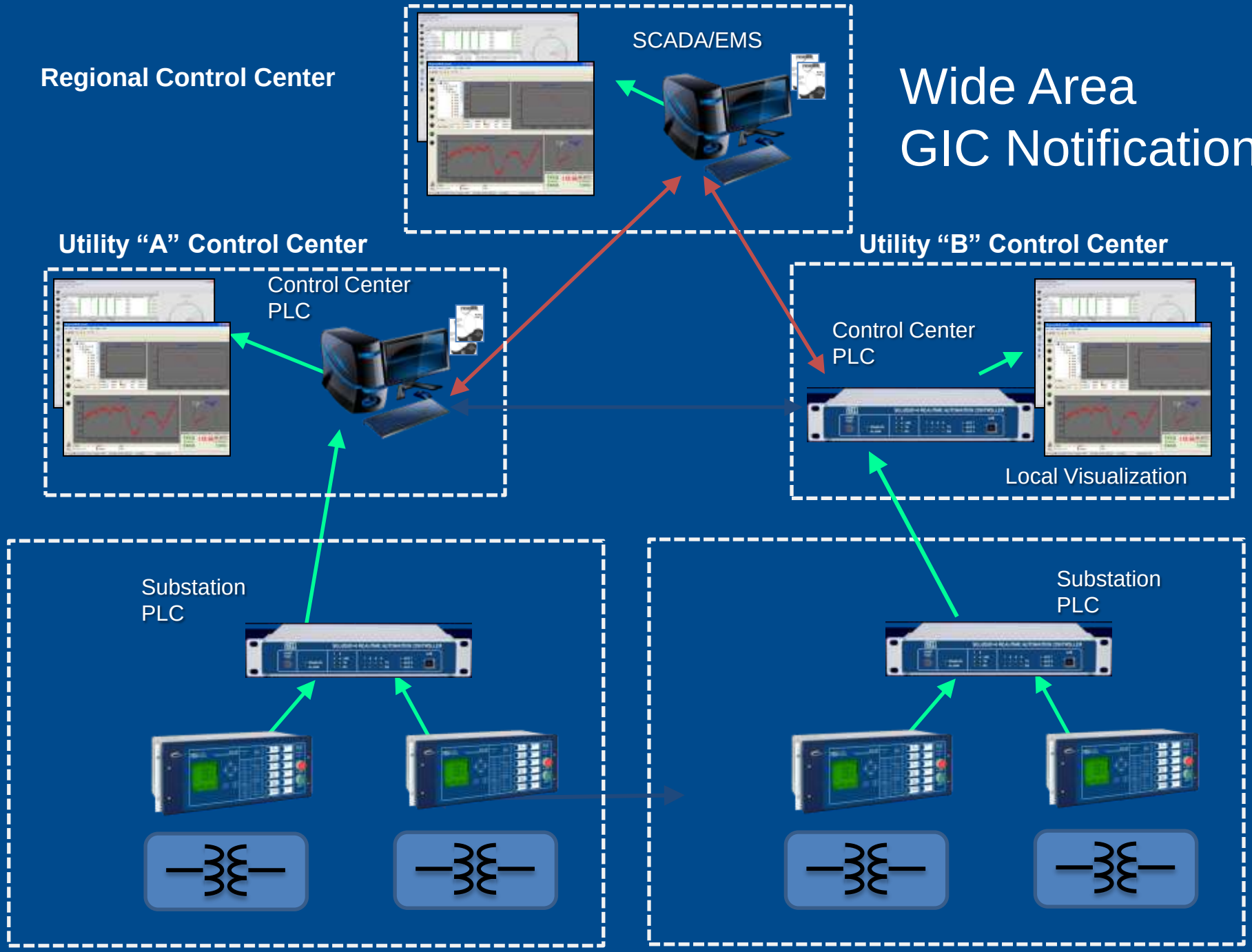

Copyright © SEL 2013

Wide Area Detection Logic - Example

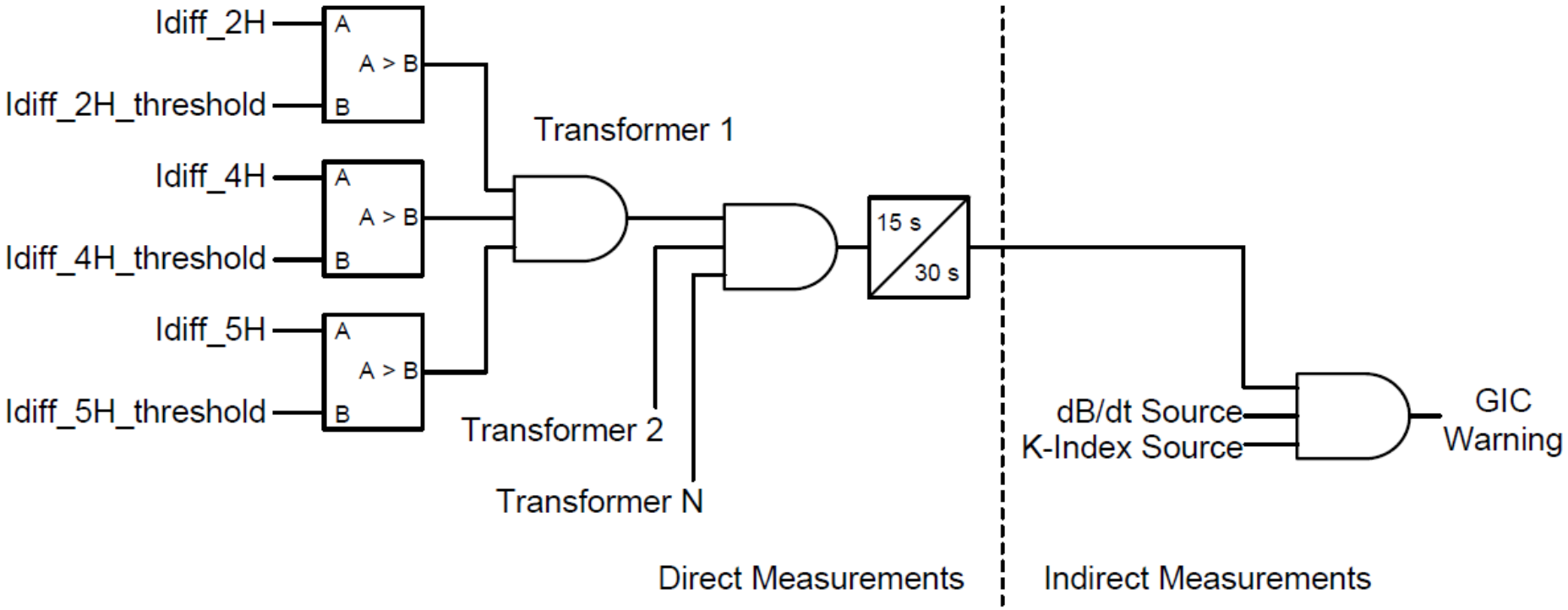

Copyright © SEL 2013

GPS and Solar Flares

- Jamming or interference (NAVWAR)
- Equipment failure
- DoD Control
- Solar flares

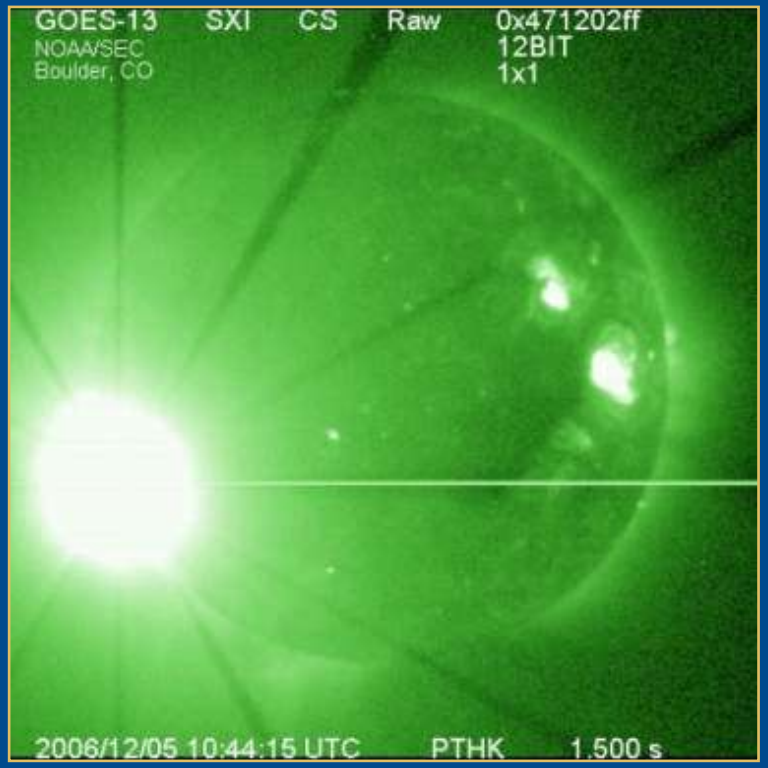

"On December 6, 2006, a solar flare created an unprecedented intense solar radio burst causing large numbers of receivers to stop tracking the GPS signal."

-- NOAA Press Release

Copyright © SEL 2013

Fiber Optic Communication

- Secure
- Deterministic
- TDM or Ethernet
- 5 msec failover
- Precise time distribution

Copyright © SEL 2013

Avoid GIC Blocking Internal Faults

- Harmonic restraint helps compensate for saturation effects
- Harmonic restraint required for inrush
- Larger internal fault current levels will overwhelm the constraint (as desired)

Copyright © SEL 2013

Avoid GIC False Trips

- Differential elements
- Overcurrent elements (fundamental driven)
- Utilize harmonics to arm GIC schemes

Copyright © SEL 2013

Protection Elements

- Distance elements – fundamental only
- Overcurrent elements – fundamental only
- Line current differential – no new paths

Copyright © SEL 2013

The Future: State-Based Feedback Control

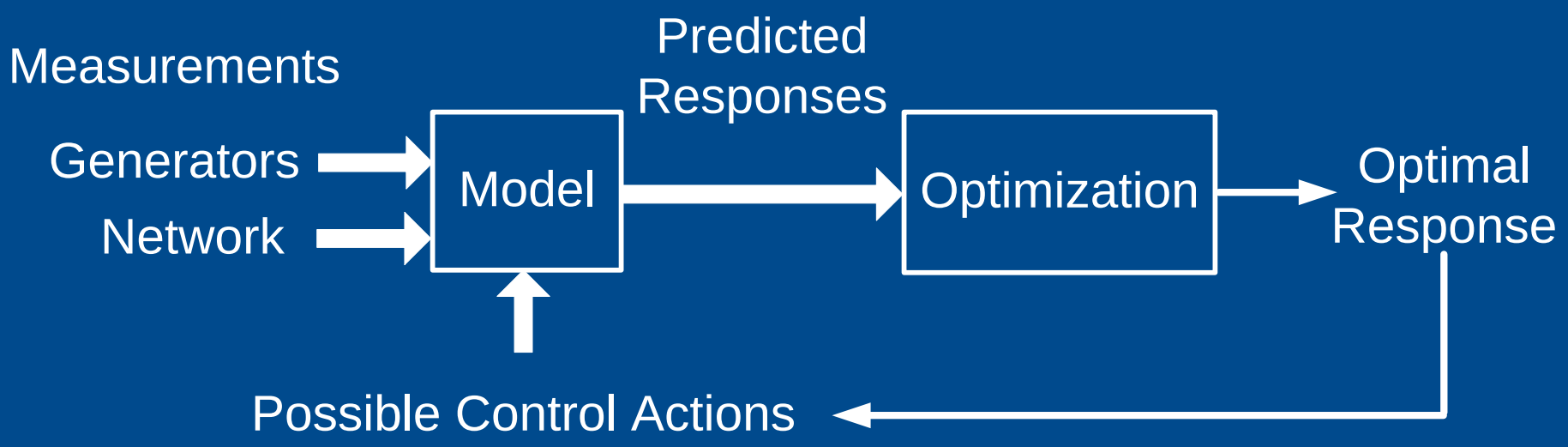

Copyright © SEL 2013

Large, Complicated Disturbances

- Difficult to anticipate all possible outcomes
- NE 39-bus: $\binom{46}{K}$ K-line outage combinations

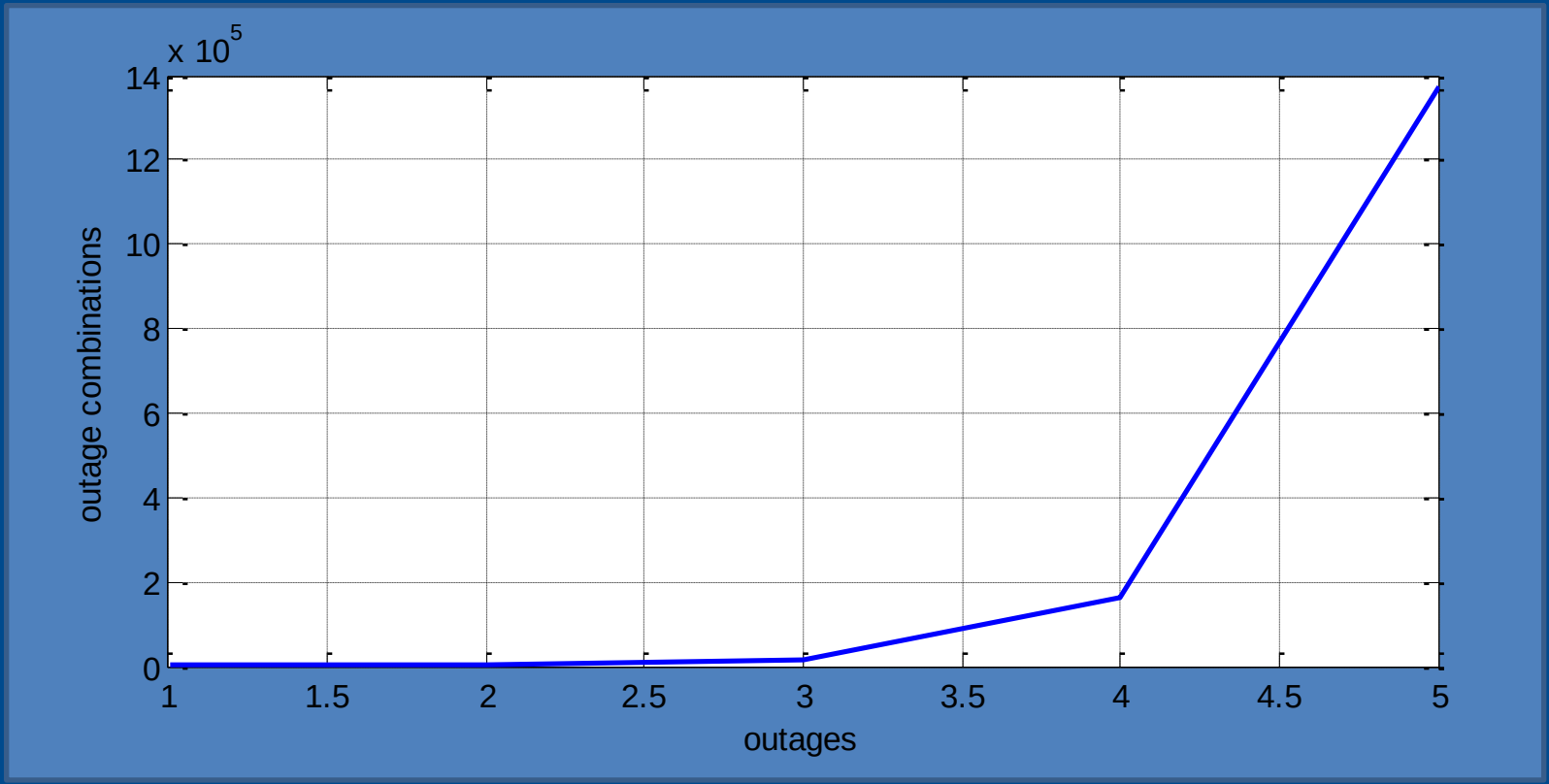

Copyright © SEL 2013

Strategy

- Don’t try to predict contingencies
- Instead, predict state evolution
  - Run in real-time
  - Iterative application, with feedback
  - At each iteration, search for optimal control
- Goal
  - Respond to unanticipated events
  - Minimize cost and system impact

Copyright © SEL 2013

Cost-based Control Selection

- Unique feature of power system control – changing the system

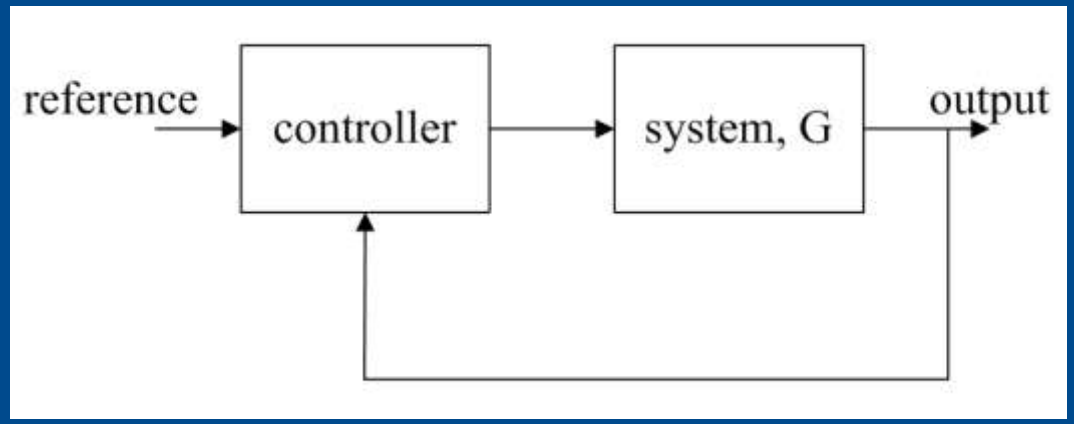

- Therefore, don't want to …

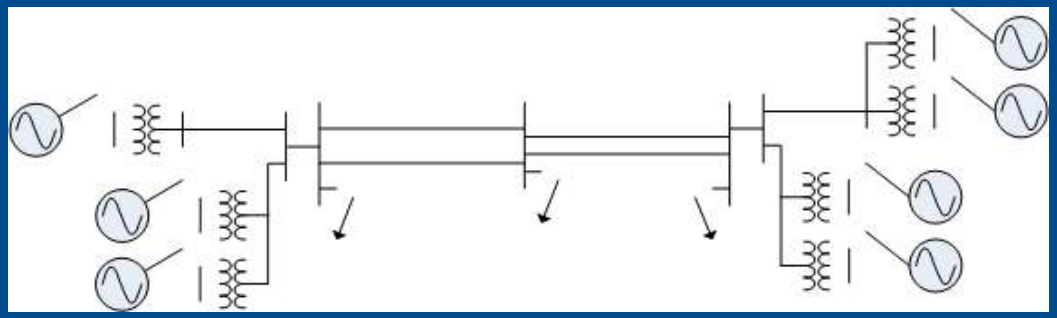

Copyright © SEL 2013

Nonlinear System => Model Based

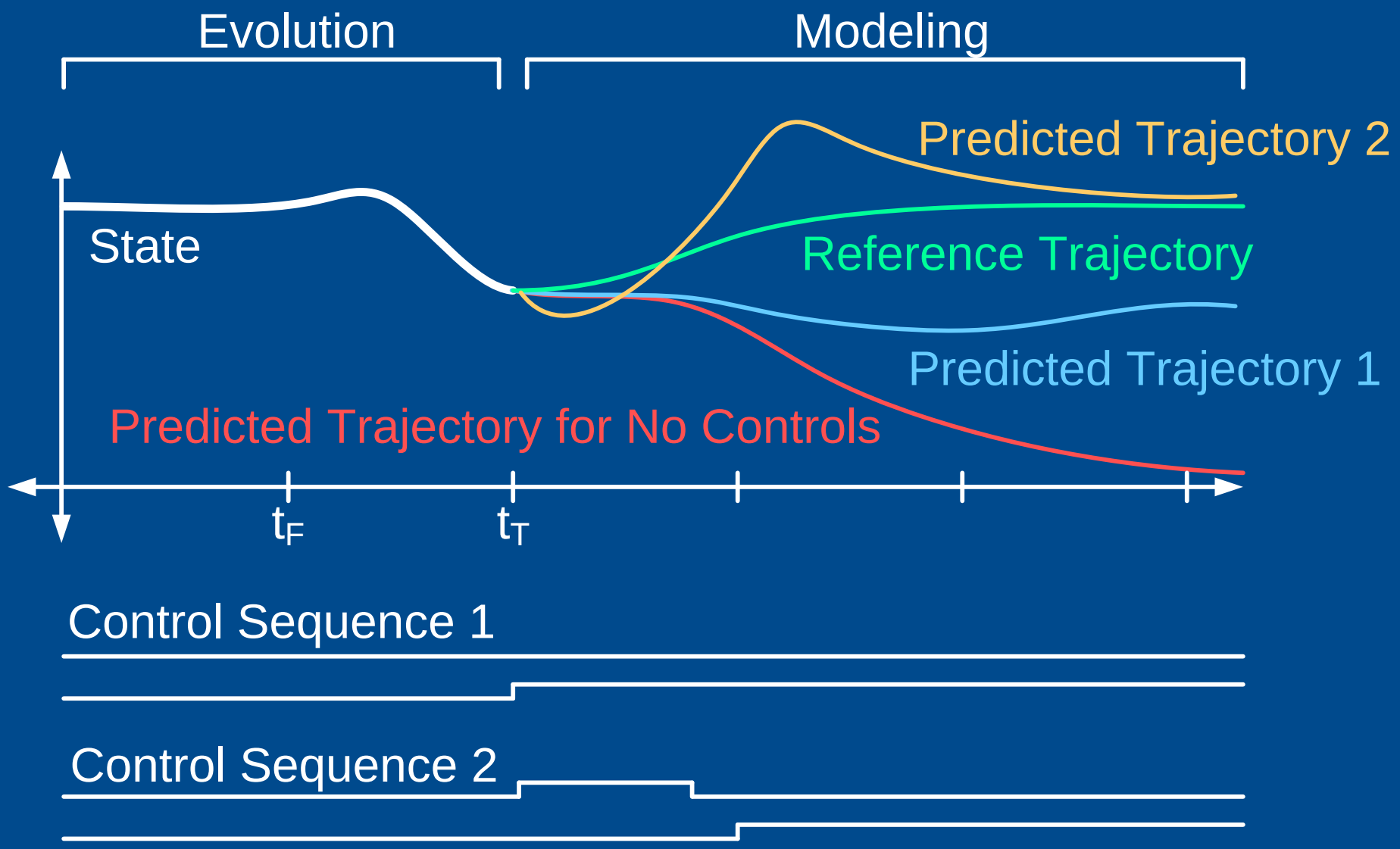

Copyright © SEL 2013

Sequence Of Events

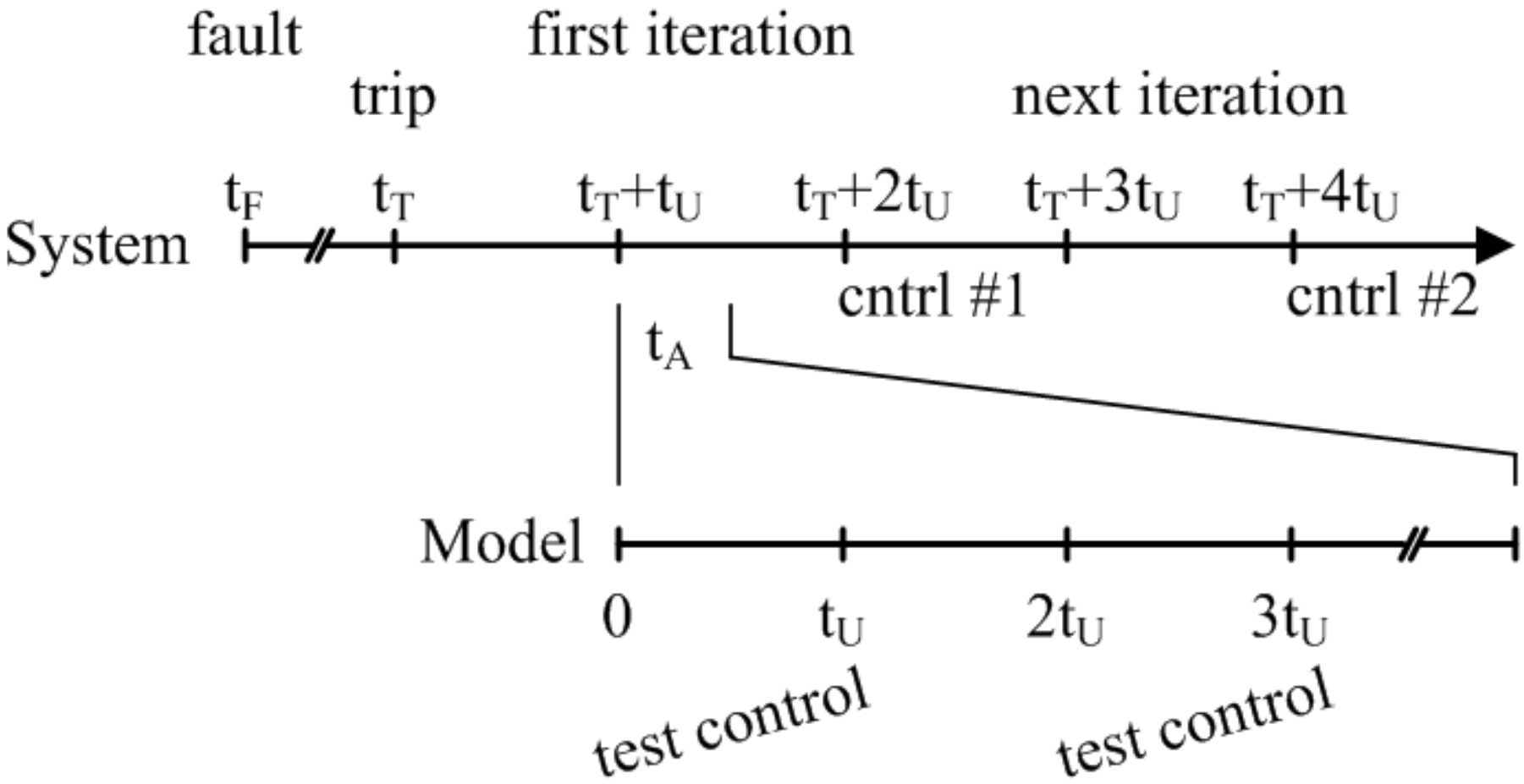

Copyright © SEL 2013

Example: NE-39 Bus Test System

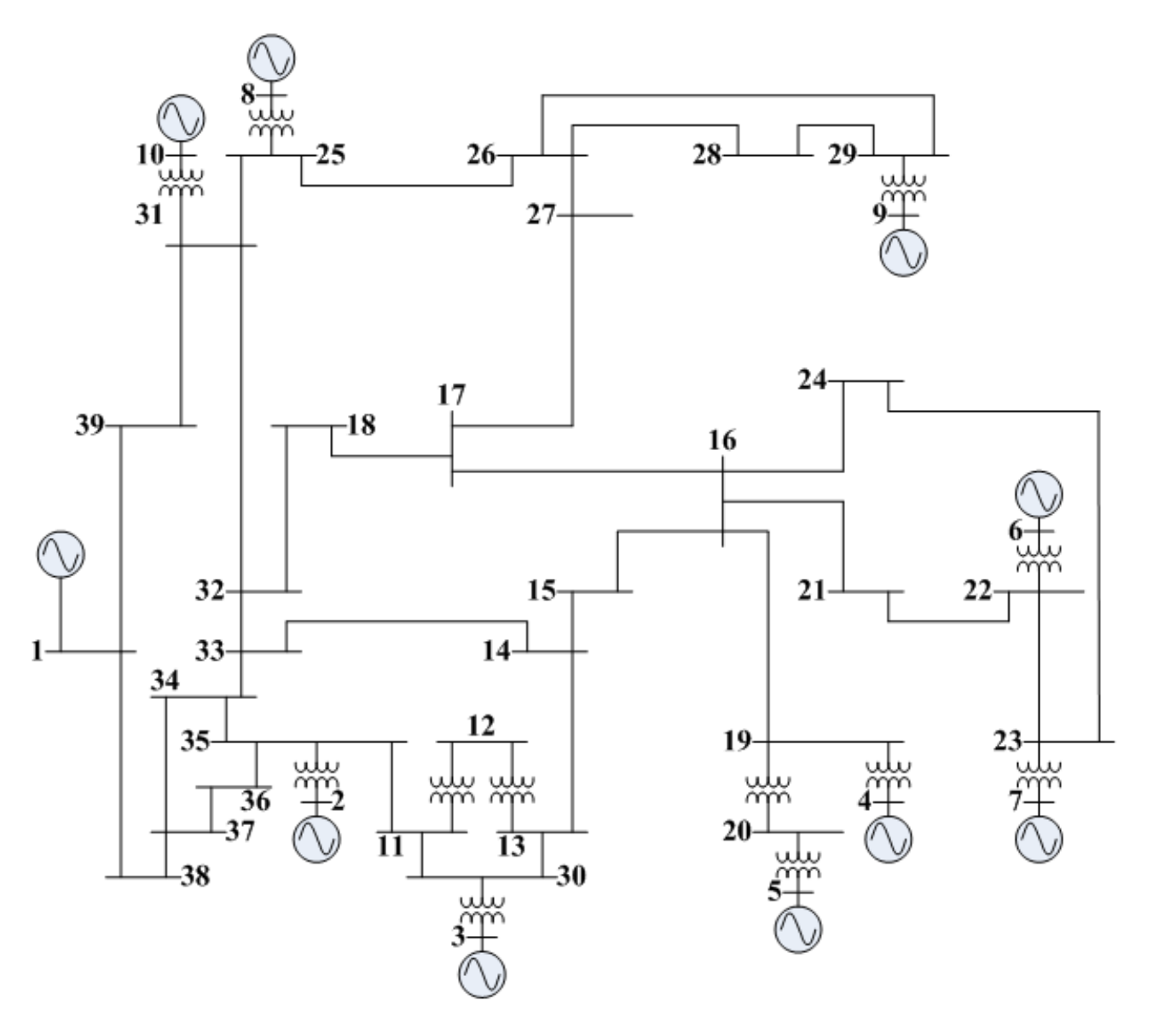

Copyright © SEL 2013

Example: NE-39 Bus Test System

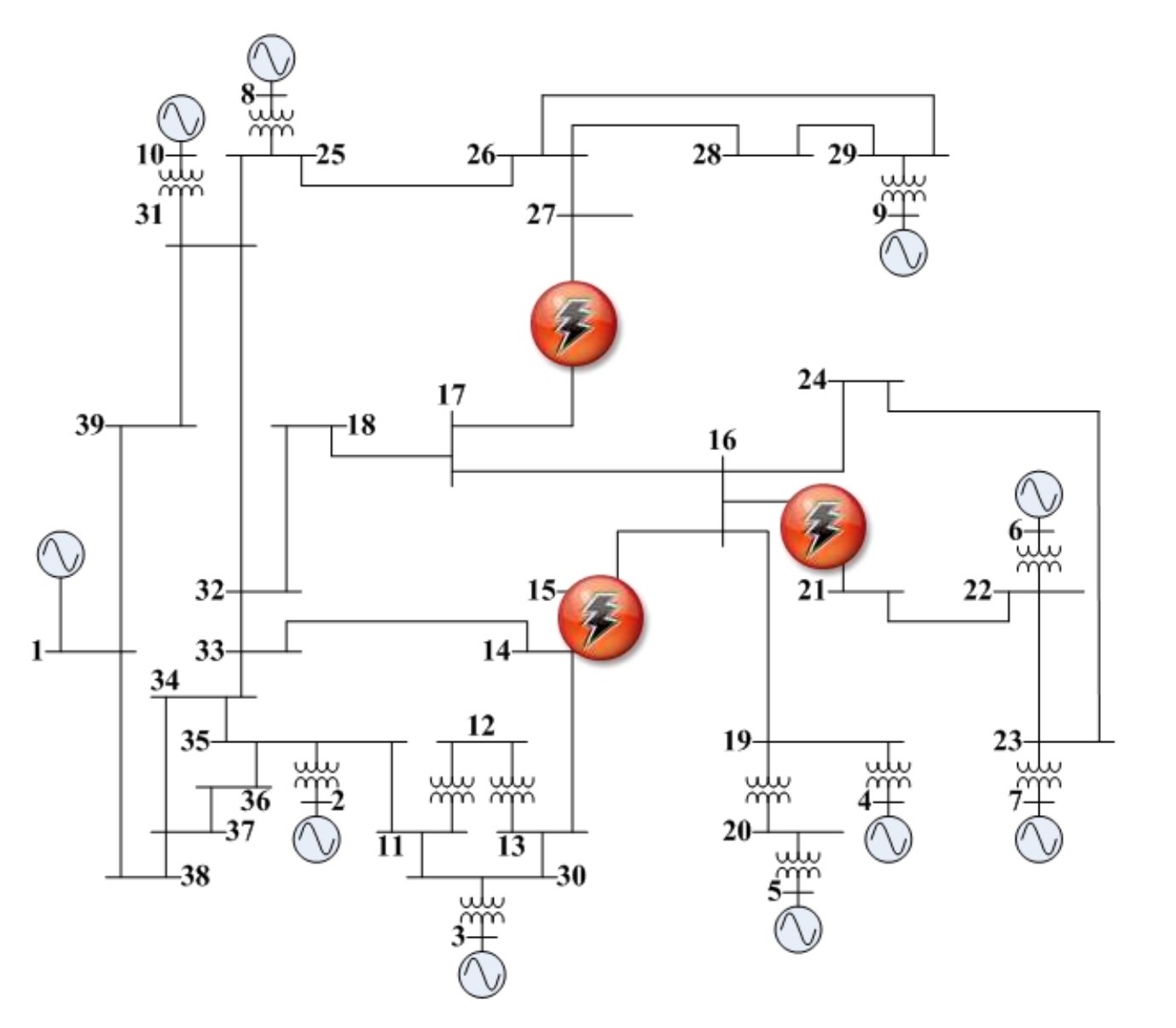

Copyright © SEL 2013

First Iteration Control Selection (1)

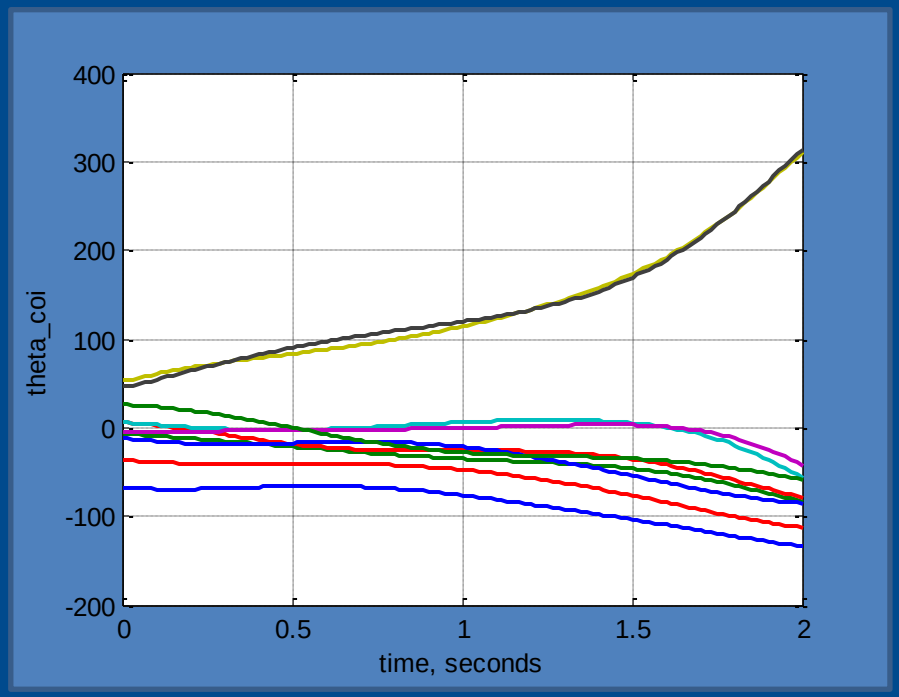

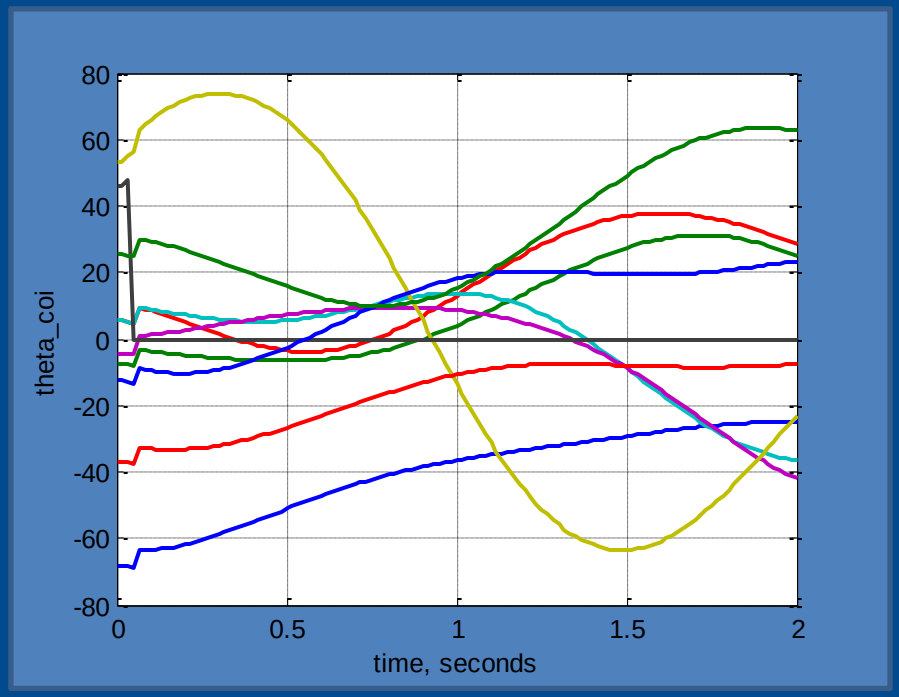

<u>No controls</u>
State Cost = 0.08
Control Cost = 2
Total Cost = 0.16

<u>Trip G7, then no control</u>
State Cost = 0.014
Control Cost = 3
Total Cost = 0.042

Copyright © SEL 2013

First Iteration Control Selection (2)

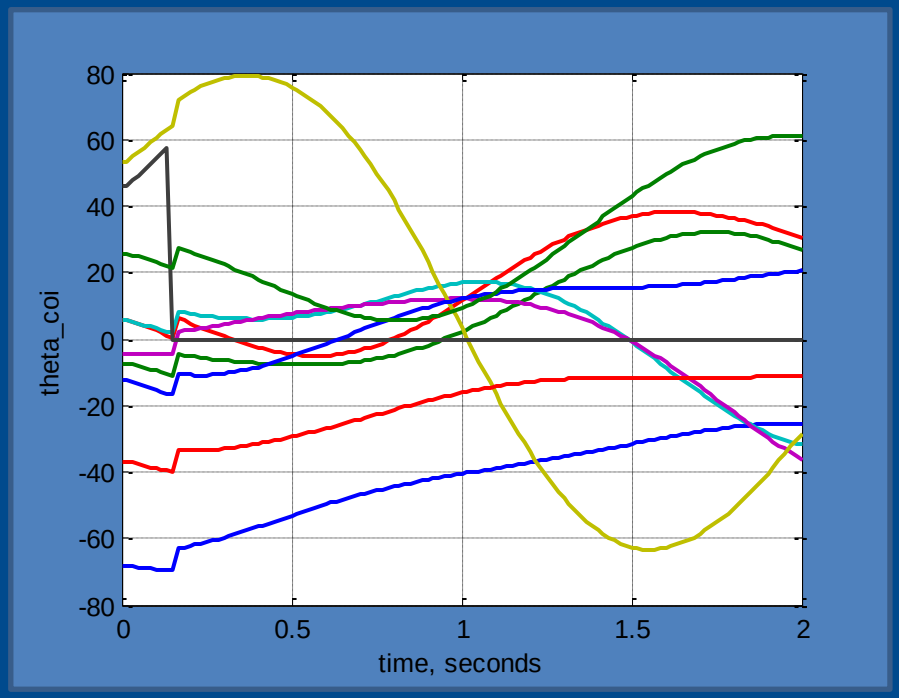

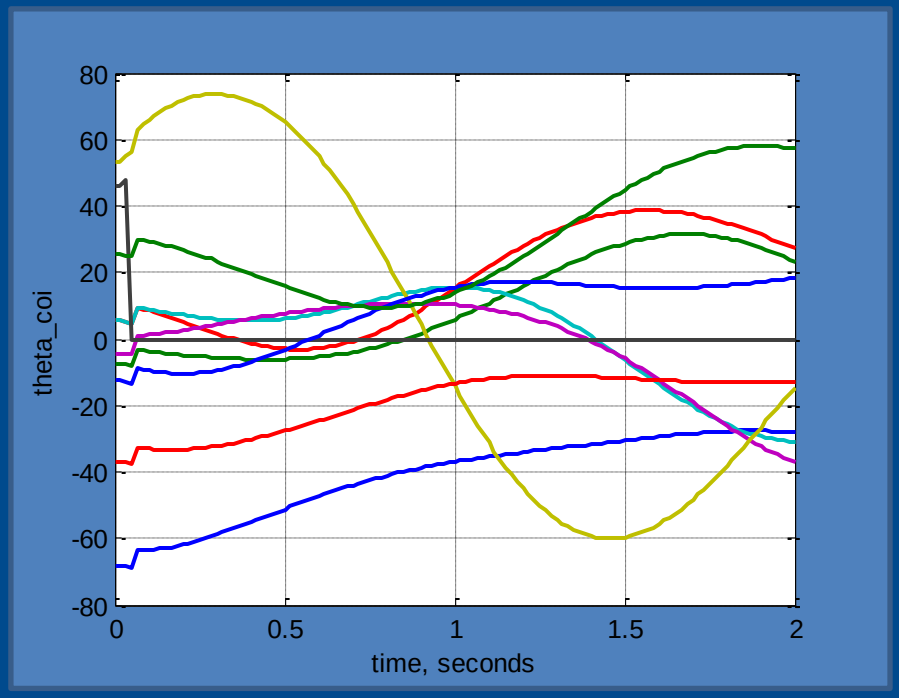

<u>Comp 31-32, then trip G7</u>
State Cost = 0.014
Control Cost = 4
Total Cost = 0.056

<u>Trip G7, then comp 31-32</u>
State Cost = 0.012
Control Cost = 4
Total Cost = 0.048

Copyright © SEL 2013

Cost Summary

Control 1	Control 2	State Cost	Control Cost	Total Cost
X	X	0.8	2	1.6
G7	X	0.14	3	0.42
C31	G7	0.14	4	0.56
G7	C31	0.12	4	0.48

Copyright © SEL 2013

Select and Apply Lowest Total Cost Control Action

Control 1	Control 2	State Cost	Control Cost	Total Cost
X	X	0.8	2	1.6
G7	**X**	**0.14**	**3**	**0.42**
C31	G7	0.14	4	0.56
G7	C31	0.12	4	0.48

… then repeat – measure the state again, select a new set of controls, ….

Copyright © SEL 2013

Without And With Controls

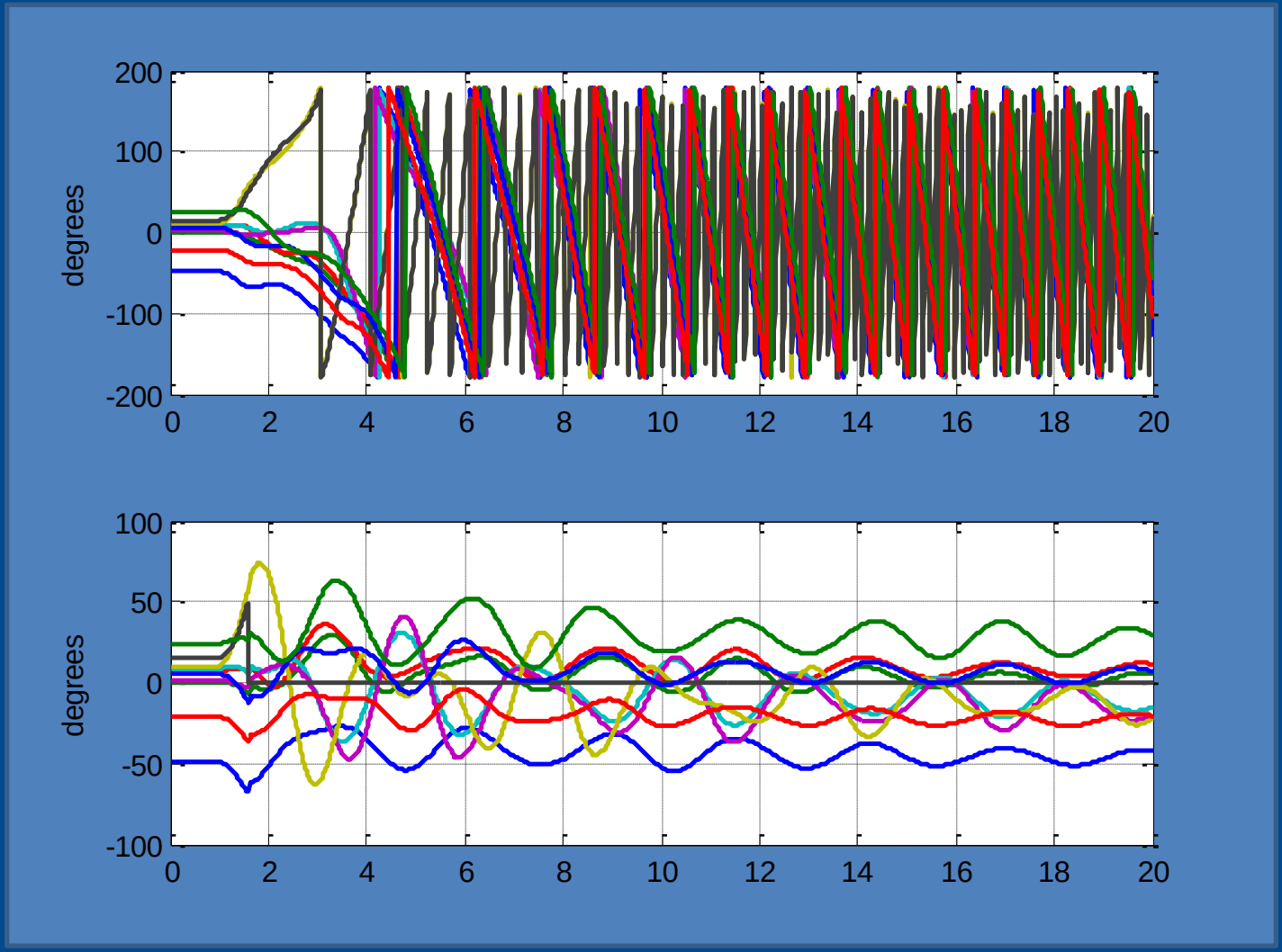

Copyright © SEL 2013

Summary

- Augment detection system with direct measurements
- Existing equipment => economical
- Should study system and protection to fully understand impact
- Next generation control schemes may help

Copyright © SEL 2013