DTRA MHD-E3 Program Overview

GMD Workshop

Michael R. Rooney, DTRA/NT

27-28 August, 2013

Distribution A: Approved for public release; distribution is unlimited.

Outline

- Background
  - E3 and Geomagnetically Induced Currents (GIC)
- DTRA E3 Program Objectives
- History and Overview
  - Distribution Level Tests
  - Transmission Level Tests
  - Diagnostics and Modeling
- Accomplishments thru 2012
- Summary

Starfish Prime 1.4 Mt @ 250 miles

Background

- MIL-STD-188-125-1 describes the performance requirements and test methodologies for High Altitude Electromagnetic Pulse (HEMP) for Fixed Ground Based Command, Control, Communications, Computers, and Intelligence (FGBC4I) facilities for military systems
- For the most critical time urgent missions this involves back-up power, and electromagnetically hardened (shielded and penetration protected) facilities
- GIC and MHD-E3 coupled currents have similar frequency content and both result in half-cycle saturation of transformers on long power lines

MIL-STD-188-125-1

- <u>Fixed Facility Interface Standard</u>
- States that system must meet certain performance criteria in order to have “high” confidence of survival with “low” risk
- Built around two principles
  - Testability: must prove **through tests** that the “as-installed” system meets criteria
  - Threat-relatability: tests must be “relatable” to the stress levels incurred in the actual HEMP environment

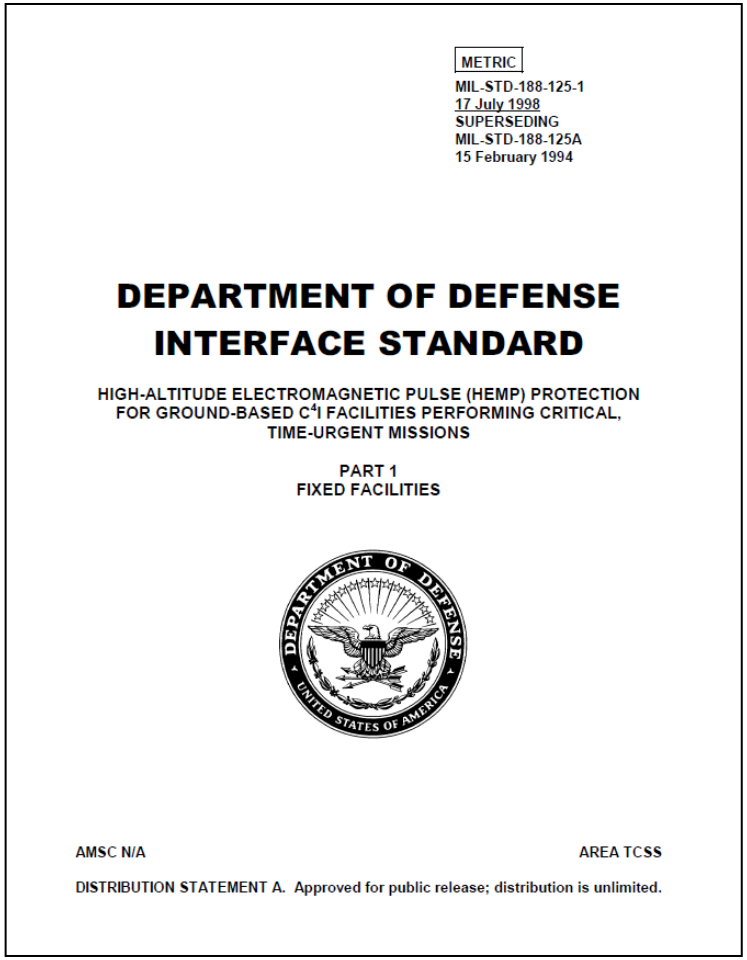

METRIC

MIL-STD-188-125-1
17 July 1998
SUPERSEDING
MIL-STD-188-125A
15 February 1994

DEPARTMENT OF DEFENSE
INTERFACE STANDARD

HIGH-ALTITUDE ELECTROMAGNETIC PULSE (HEMP) PROTECTION FOR GROUND-BASED C^{4}I FACILITIES PERFORMING CRITICAL, TIME-URGENT MISSIONS

PART 1
FIXED FACILITIES

AMSC N/A AREA TCSS

DISTRIBUTION STATEMENT A. Approved for public release; distribution is unlimited.

MIL-HDBK-423

- Provides design guidance and examples of good practice to support the implementation of (HEMP) hardening and testing requirements of MIL-STD-188-125-1
- Includes management guidance for HEMP protection acquisition programs and hardness maintenance and hardness surveillance for operational facilities

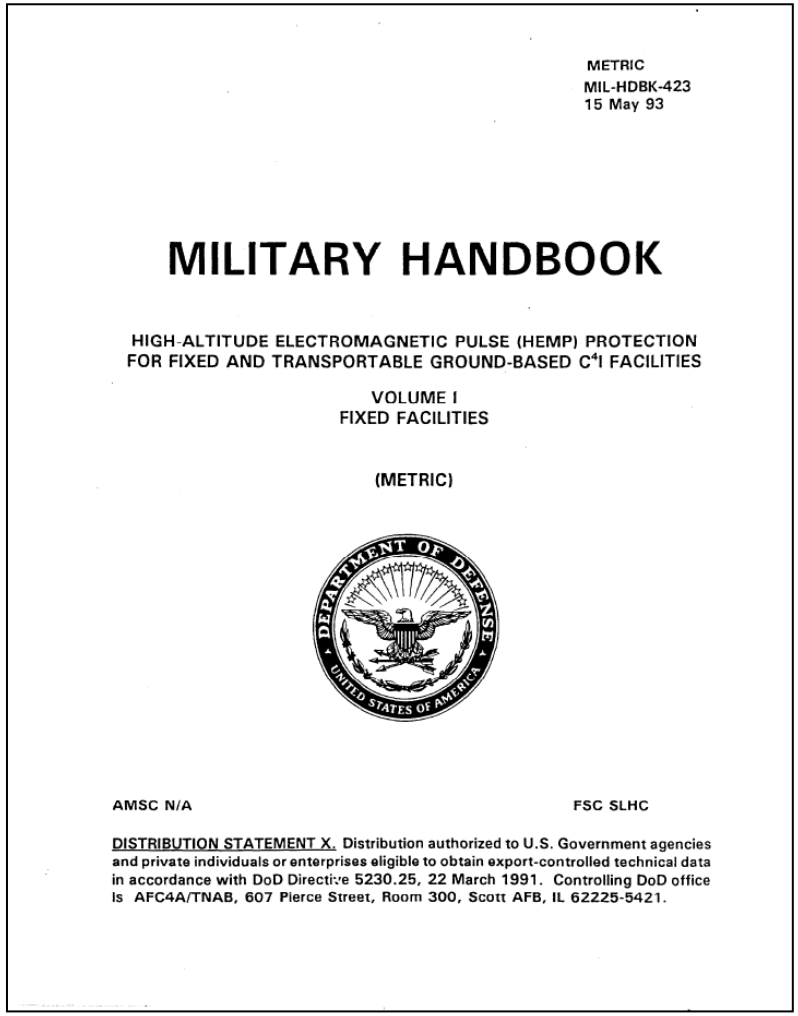

METRIC
MIL-HDBK-423
15 May 93

MILITARY HANDBOOK

HIGH-ALTITUDE ELECTROMAGNETIC PULSE (HEMP) PROTECTION FOR FIXED AND TRANSPORTABLE GROUND-BASED C^4I FACILITIES

VOLUME I
FIXED FACILITIES

(METRIC)

AMSC N/A FSC SLHC

DISTRIBUTION STATEMENT X. Distribution authorized to U.S. Government agencies and private individuals or enterprises eligible to obtain export-controlled technical data in accordance with DoD Directive 5230.25, 22 March 1991. Controlling DoD office is AFC4A/TNAB, 607 Pierce Street, Room 300, Scott AFB, IL 62225-5421.

MIL-STD-188-125-1

- The standard identifies three threats
- E1 (Early Time/Fast) Pulse
  - Couples 2,500A to 5,000A peak current on conducted penetrations
  - Waveshape: 20 ns rise / 500 ns duration
  - Couples to: any lines about 1 foot or longer outside HEMP shield
- E2 (Intermediate Time) Pulse
  - 250A on conducted penetrations
  - Waveshape: 1.5us rise / 4ms duration
  - Couples to: Lengths of 200m+ (intrasite communications and security lines, parking lot lights, etc.)
- E3 (Late Time/Magnetohydrodynamic) Pulse
  - 1000A on conducted penetrations
  - Waveshape: 200ms rise / 25 sec duration
  - Couples to: Lengths of 10's of km (Cross-country lines)

Notional

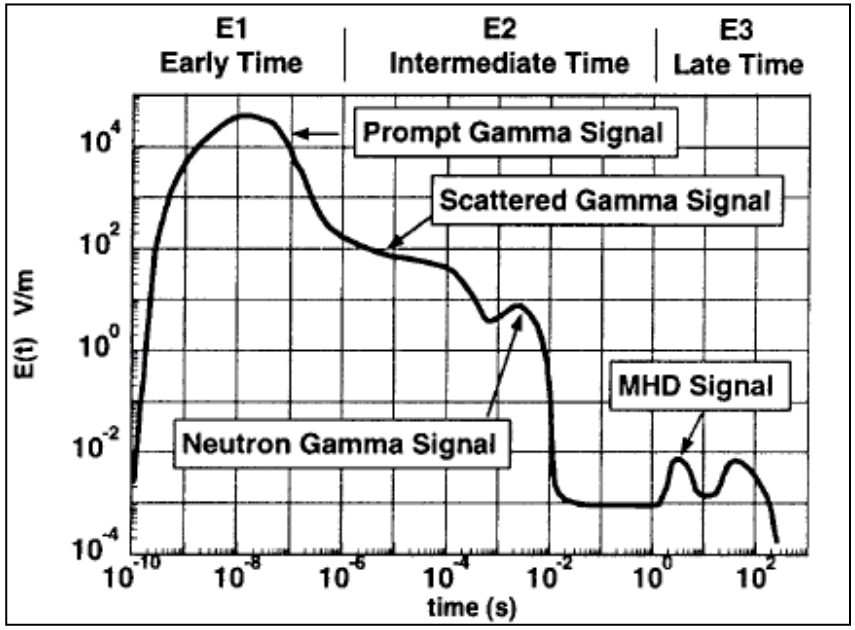

E3 Primary and Secondary Threats

- Primary threat is a Quasi-DC current generated by a plasma interaction with the Earths magnetic field
  - There are multiple components of this field associated with the atmospheric heave and the atmospheric plasma propagation.
  - The composite induced currents are a slow risetime (100's of msec), long (sec) pulse with an estimated amplitude for long lines of ~1000 Amps.
- The Quasi DC current causes half-cycle saturation of transformers with a return loop which results in generation of harmonics (a secondary threat) (especially even harmonics)

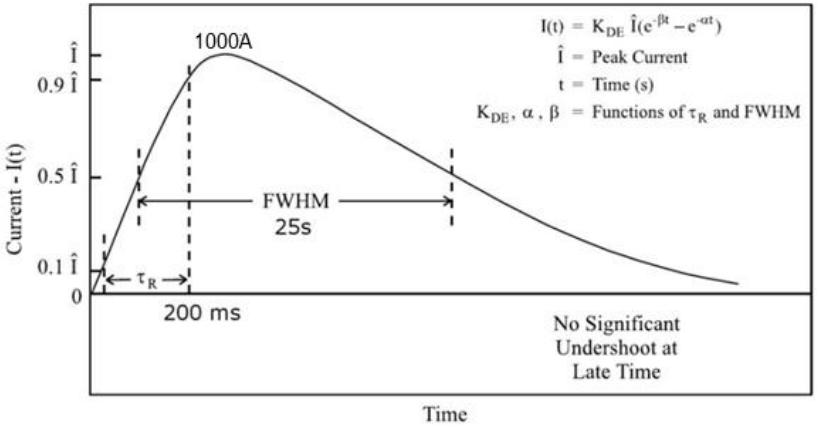

GIC

- Geomagnetically Induced Currents or Solar Induced Currents (GIC/SIC)
- Result from Coronal Mass Ejection events commonly referred to as solar substorms interacting with the Earth's magnetic field
- Currents approaching 300 Amps have been reported

Outline

- Background
  - E3 and Geomagnetically Induced Currents (GIC)
- DTRA E3 Program Objectives
- History and Overview
  - Distribution Level Tests
  - Transmission Level Tests
  - Diagnostics and Modeling
- Accomplishments thru 2012
- Summary

Program Objectives

- Assess the importance and effects of the MHD-E3/GIC threat to military facilities and the Defense Critical Infrastructure (DCI) supporting military missions.
- Obtain empirical data to determine the detailed response of power systems to the Quasi DC threat.
- Develop cost-effective test methodologies and measurement techniques for MHD-E3 testing.
- Provide updates and suggestions for modifications to the MIL-Standard and MIL-Handbook.

Outline

- Background
  - E3 and Geomagnetically Induced Currents (GIC)
- DTRA E3 Program Objectives
- History and Overview
  - Distribution Level Tests
  - Transmission Level Tests
  - Diagnostics and Modeling
- Accomplishments thru 2012
- Summary

History

- Distribution Level Testing
  - DTRA Phase I Albuquerque Tests 2004/2005
  - DTRA Phases II,III Albuquerque Test Bed 2007-2009
- Transmission Level Testing
  - Phase IVA DTRA/INL Tests 2011
  - Phase IVB DTRA/INL Tests 2012
- Modeling
  - Pspice
  - ATP
- Measurements
  - DTRA Simulated C4I Facilities Trailer
  - Complex and Resistive loads
  - SANDAQ
    - > Current and Voltage Sensors up to 138 kV

DTRA Albuquerque Testbed

- 2006/2007
  - Phase I
- 2008
  - Phase II
- 2009
  - Phase III

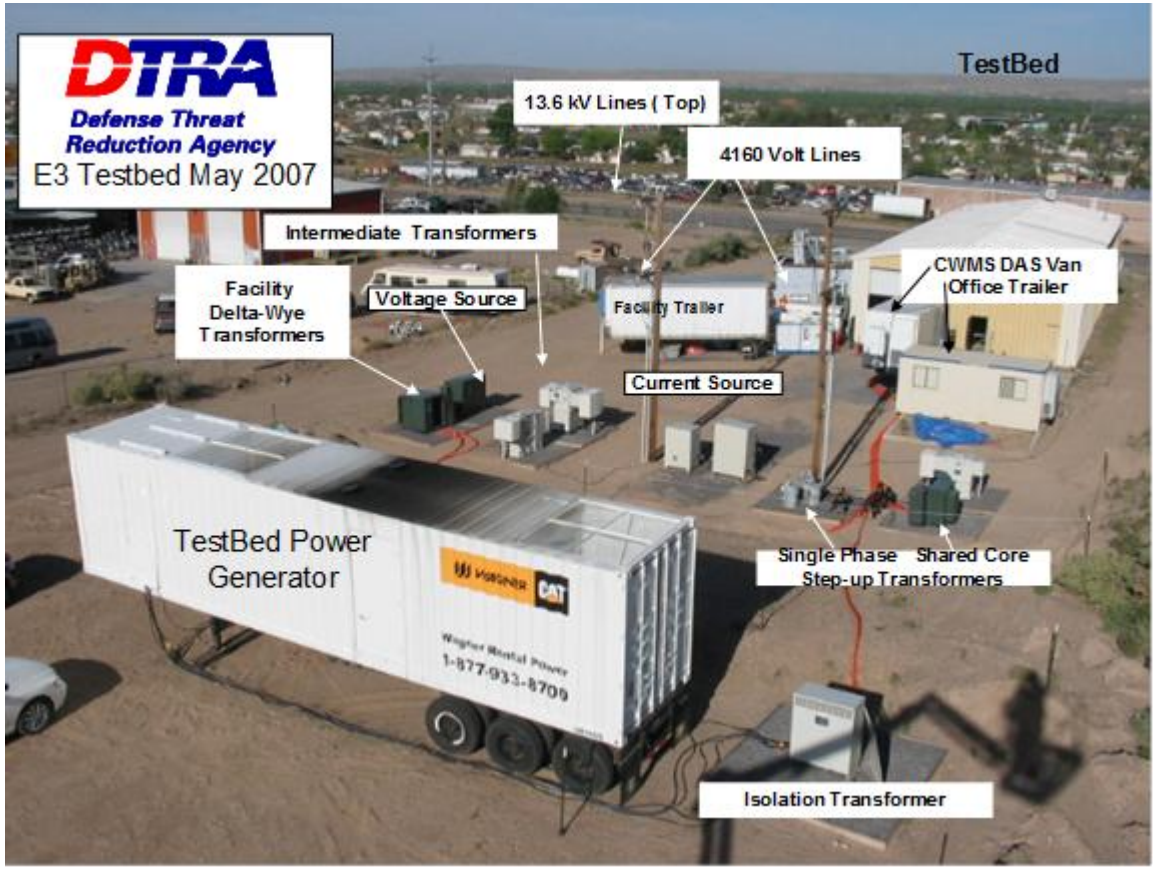

Albuquerque – Phase I-III

- DTRA developed MHD-E3 Testbed
  - 13.8 kV and 4160 V Transformers
  - Complex Facility-like Loads
- Distribution Level Power Transformer Simulation
  - Phase I – Primary Threat
  - Phase II – Secondary Threat
  - Phase III – Measurement Quantification, Propagation and Effects

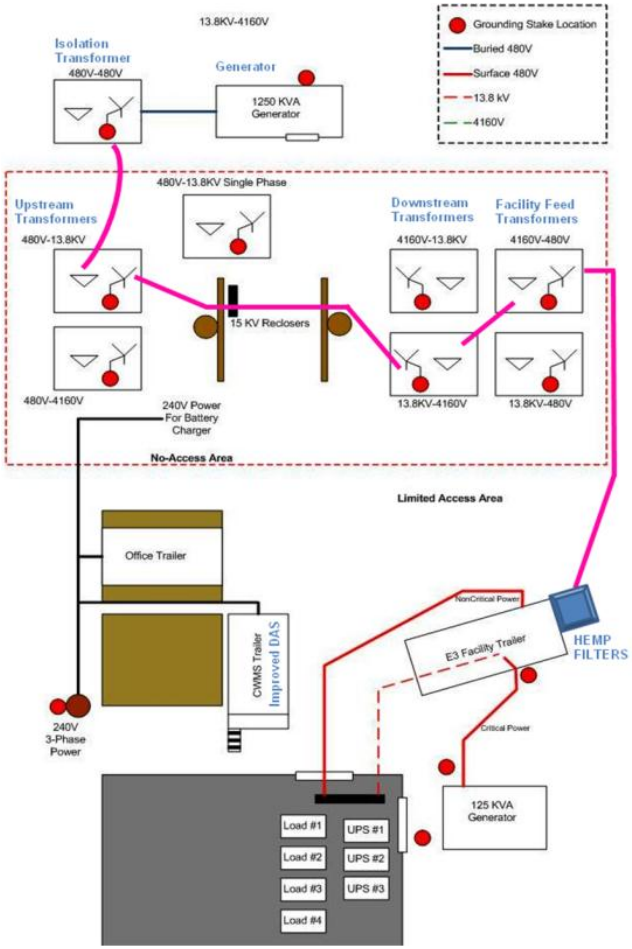

Transmission Level Tests
Phase IV-A/B - Idaho National Laboratory

- INL 138 kV Loop
  - Materials and Fuels Complex-Test Site (MFC-TS)
    - > Test Control Center
    - > DTRA Source
    - > Loads
  - Critical Infrastructure Test Range Complex (CITRC) Substation
    - > INL Grid Control Station
    - > Additional Measurements
  - Scoville Substation
    - > Western Power Grid Feed
    - > Additional Measurements

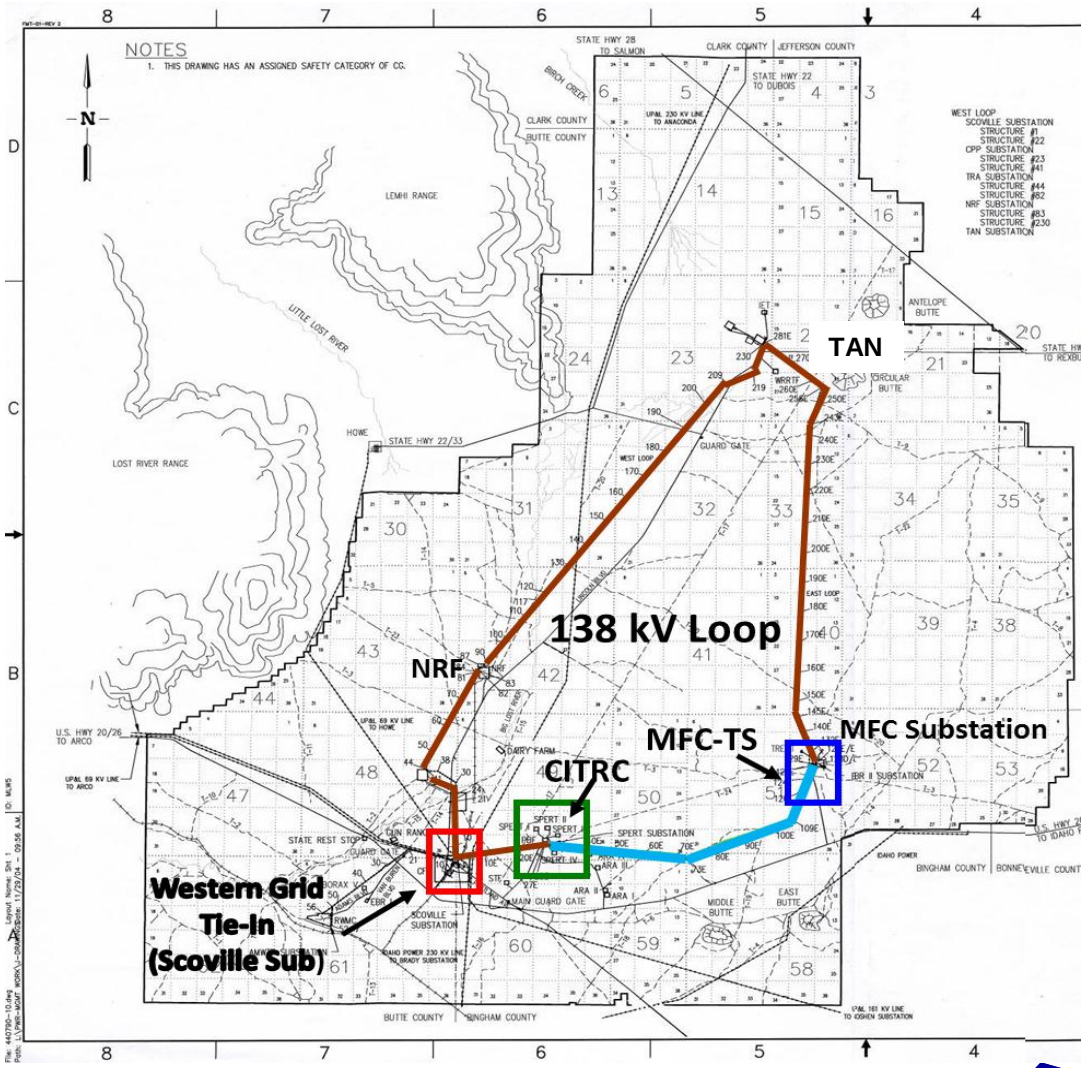

Phase IV-B Testbed at MFC-TS

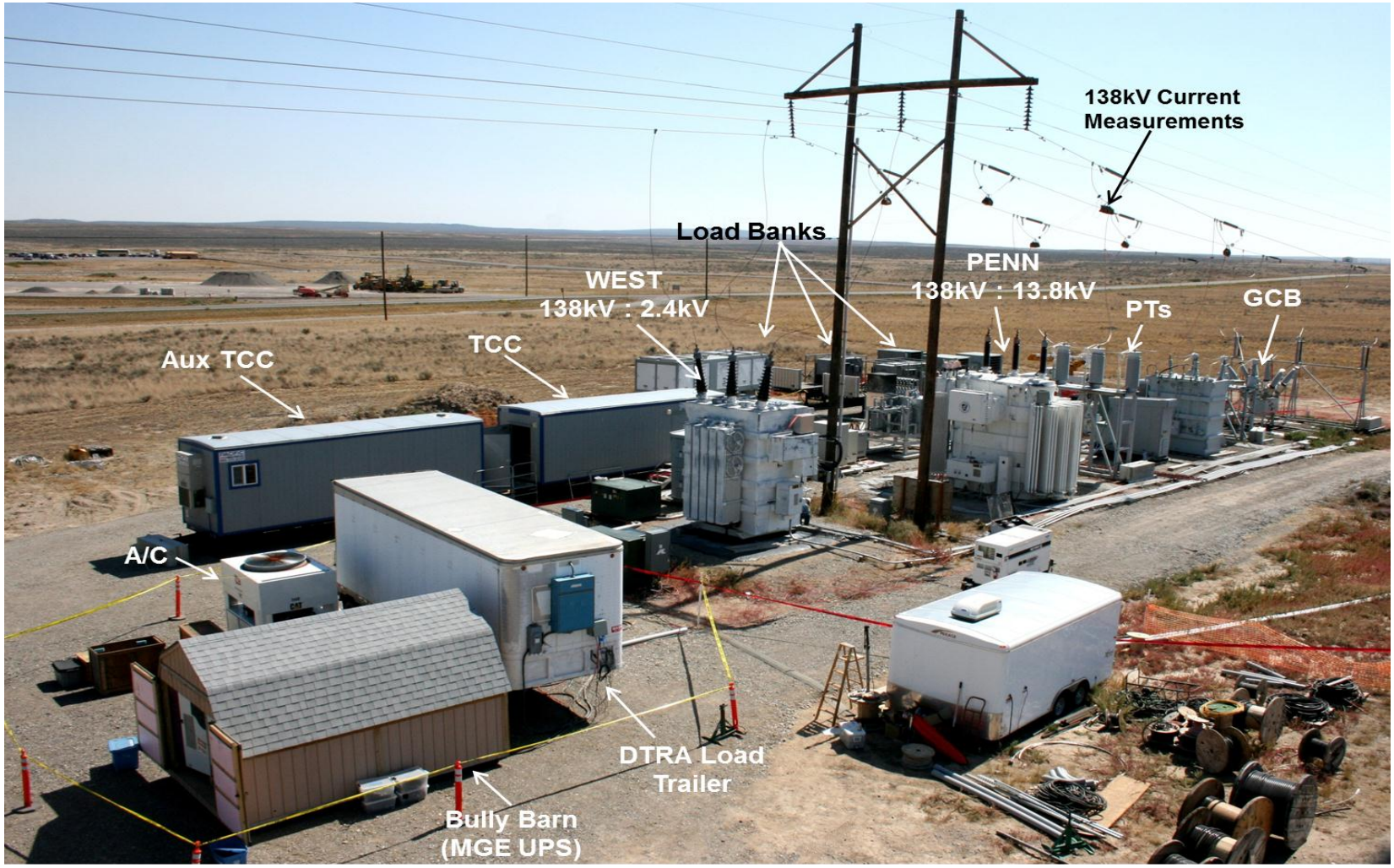

Phase IV-B Layout and Test Summary

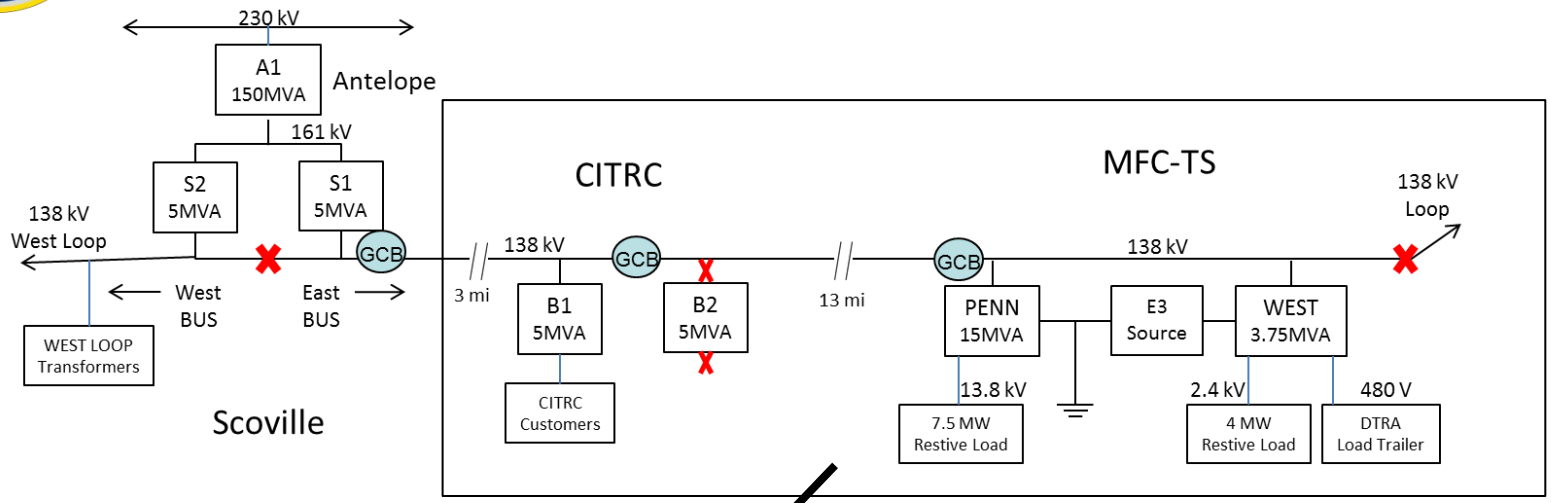

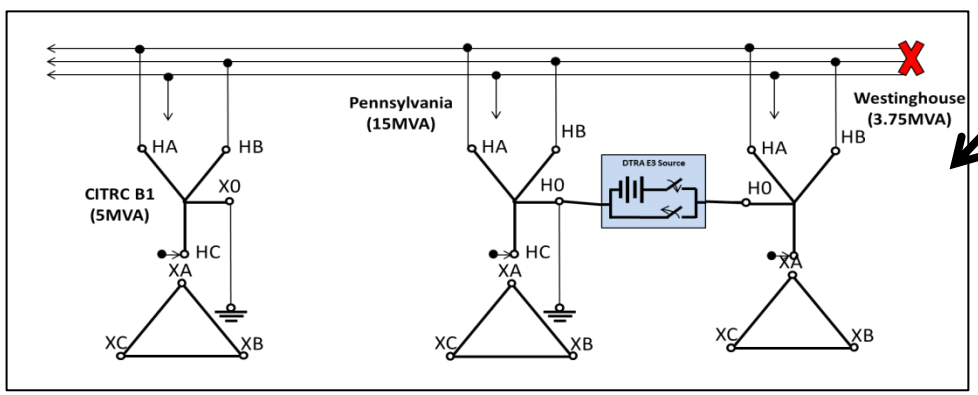

Loading Name	Code	Load Type	PENN Loading	WEST Loading	Tests
Baseline Repeat	BHR	Resistive	1.5 MW 10%	375 kW 10%	29
Baseline Extended	BHE	Resistive	7.5 MW 50%	2 MW 50%	12
Complex Repeat	L5R	Resistive & Complex	1.5 MW 10%	375 kW 10%	11
Complex Extended	L5E	Resistive & Complex	7.5 MW 50%	2 MW 50%	14
Complex Full	L5F	Resistive & Complex	7.5 MW 50%	3.75 MW 100%	5
Complex No HEMP Filter	L5RN/L5EN	Resistive & Complex	10%-50%	10%-50%	6
Emprimus Global	L5R/L5E/L5F	Resistive & Complex	10%-50%	10%-100%	16
Emprimus Local	L5RL	Resistive & Complex	1.5 MW 10%	375 kW 10%	11

104 Simulated events
2 Old 3.75 and 15 MVA 138 kV transformers
Complex loads at 10-50/100% rated loading

DTRA Simulated Facilities Trailer

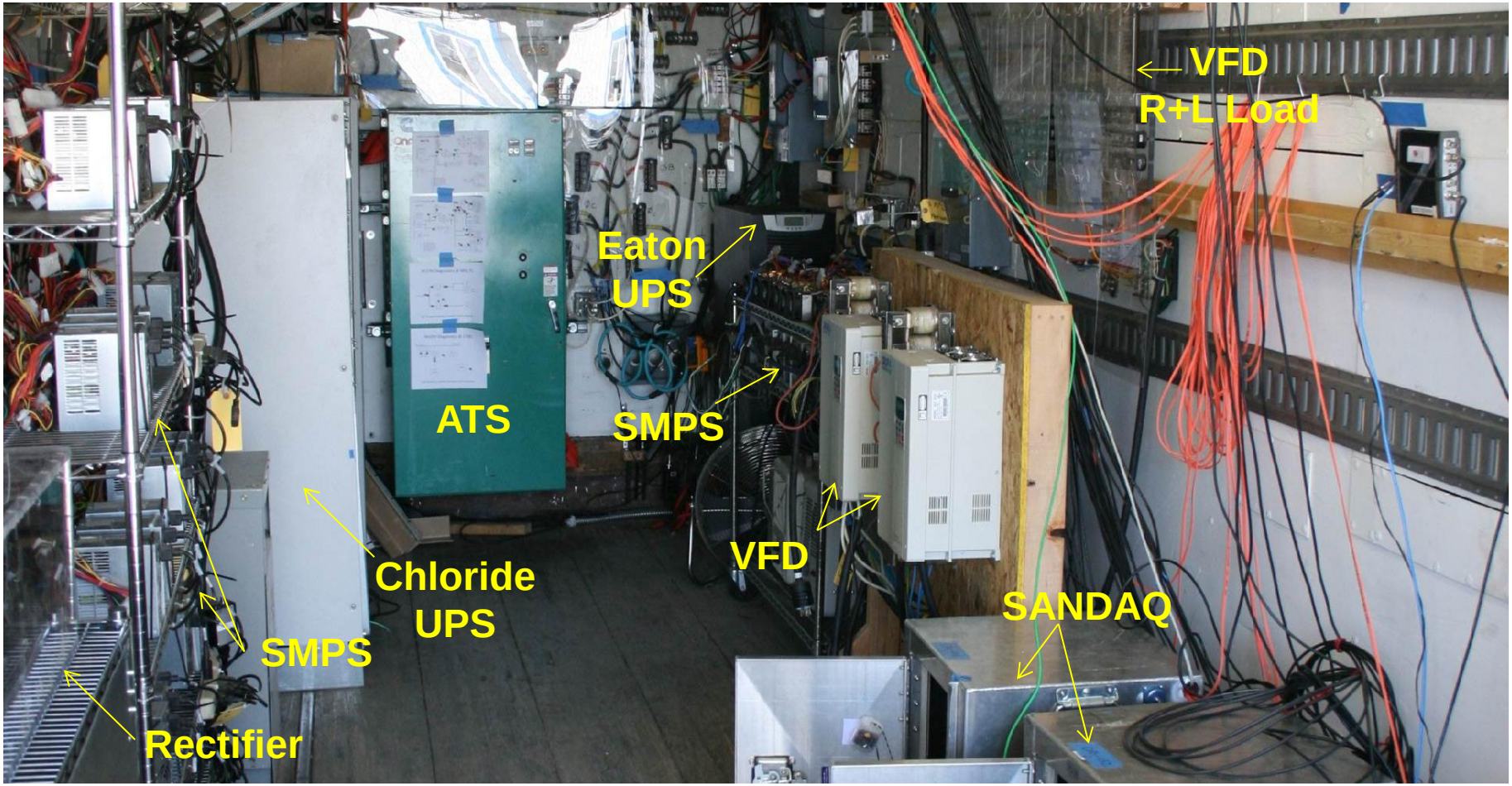

IV-B Testbed –Data/Video Diagnostics

- 6-SANDAQ Systems
  - Fiber Isolated
  - 5 at MFC-TS (120 Channels)
  - 1 at CITRC (24 Channels)
- 4 Video Cameras at MFC-TS
  - Remotely Controlled from TCC

Simulation Model '11 vs '12

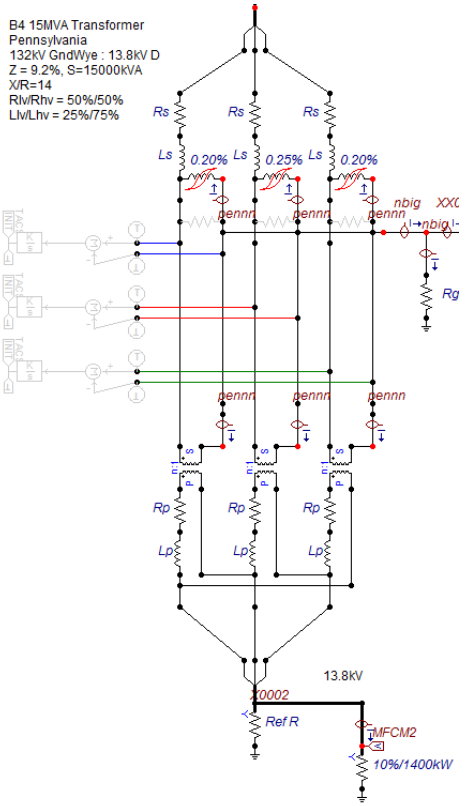

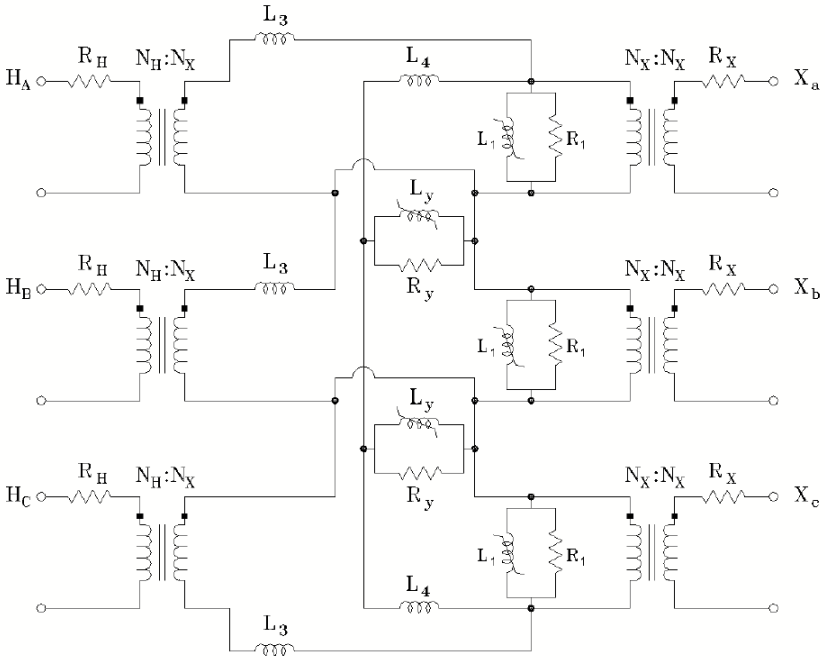

- "Individual" Legs with no interaction

- 3-leg model with 2 Yokes and "Zero sequence" tank path

Outline

- Background
  - E3 and Geomagnetically Induced Currents (GIC)
- DTRA E3 Program Objectives
- History and Overview
  - Distribution Level Tests
  - Transmission Level Tests
  - Diagnostics and Modeling
- Accomplishments thru 2012
- Summary

IEEE 519-1992
Voltage Distortion Limits

FOR HARMONIC CONTROL IN ELECTRIC POWER SYSTEMS — IEEE Std 519-1992

The limits listed in Table 11.1 should be used as system design values for the "worst case" for normal operation (conditions lasting longer than one hour). For shorter periods, during start-ups or unusual conditions, the limits may be exceeded by 50%.

Table 11.1
Voltage Distortion Limits

Bus Voltage at PCC	Individual Voltage Distortion (%)	Total Voltage Distortion THD (%)
69 kV and below	3.0	5.0
69.001 kV through 161 kV	1.5	2.5
161.001 kV and above	1.0	1.5

NOTE: High-voltage systems can have up to 2.0% THD where the cause is an HVDC terminal that will attenuate by the time it is tapped for a user.

- High Voltage (138kV) Short Period Limits
  - Individual Harmonics = 2.25% — Measured <2 % (2nd)
  - Voltage Total Harmonic Distortion = 3.75% — Measured <2%
- Low Voltage Short Period Limits
  - Individual Harmonics = 4.5% — Measured 30% (2nd)
  - Voltage Total Harmonic Distortion = 7.5% — Measured ~31%

IVB/IVA WEST 2.4kV 2nd Harmonic

- WEST secondary 2.4kV 120 Hz voltage harmonics for DC drive levels of 0 - 120 Amps
- 2nd Harmonic ~1.5x higher in IVA (bottom)
- Expected due to less voltage distortion/sag seen in IVB

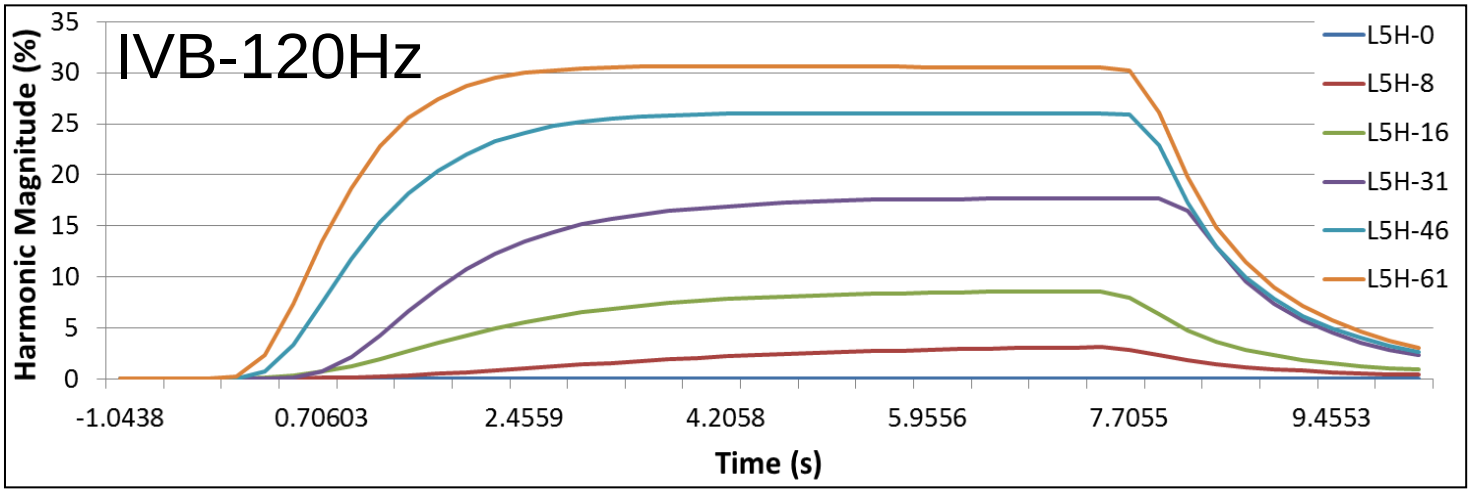

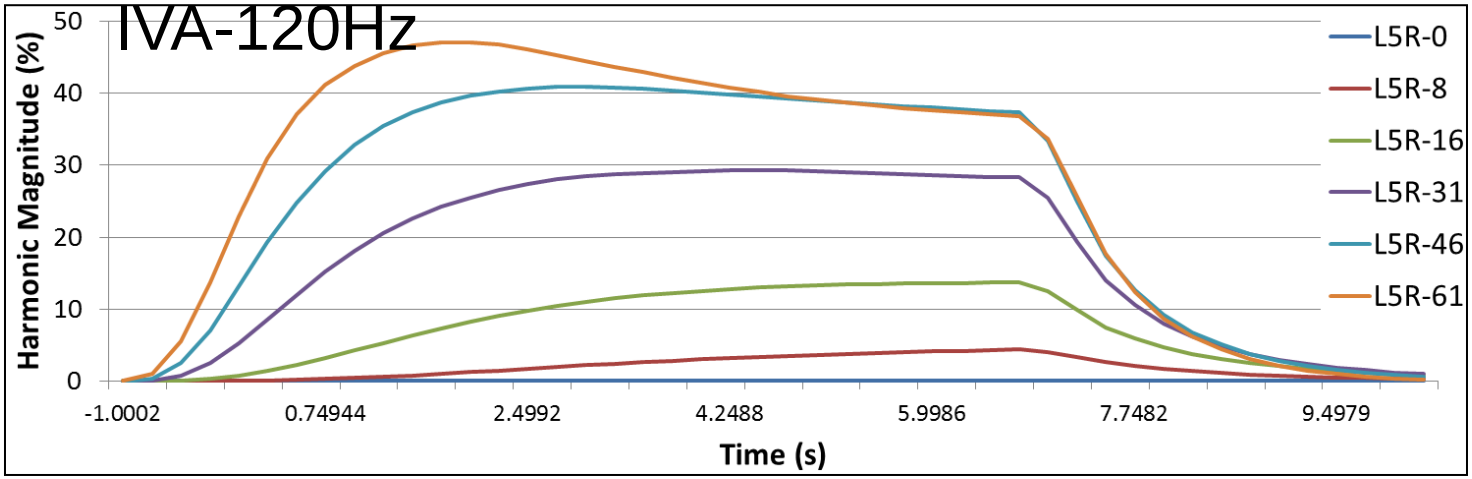

Sample Individual Harmonics

Measured vs. Simulated – West 2.4 Kv

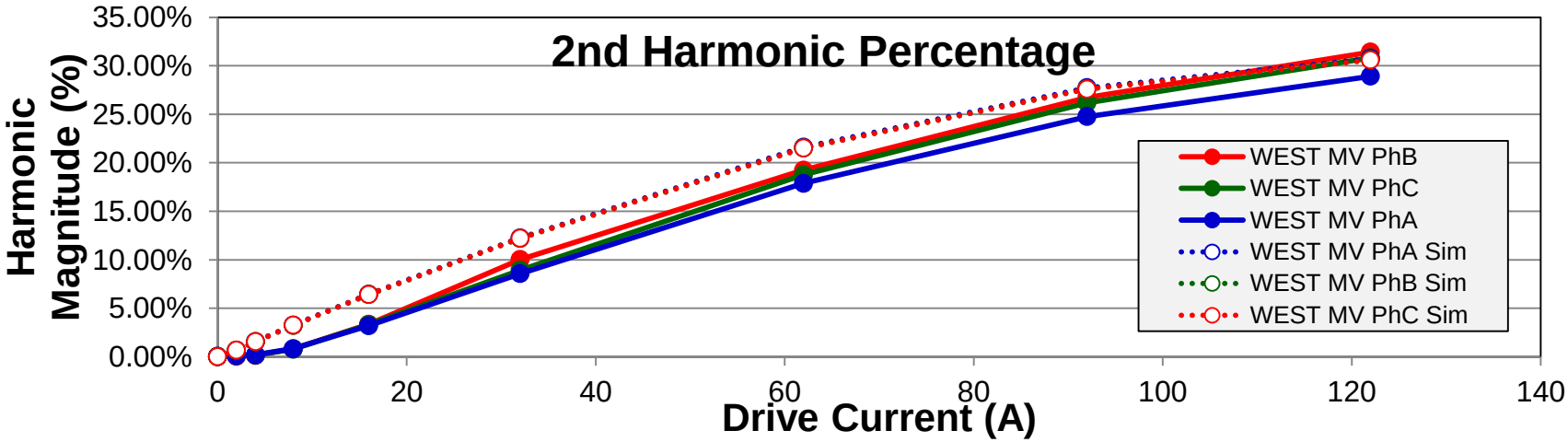

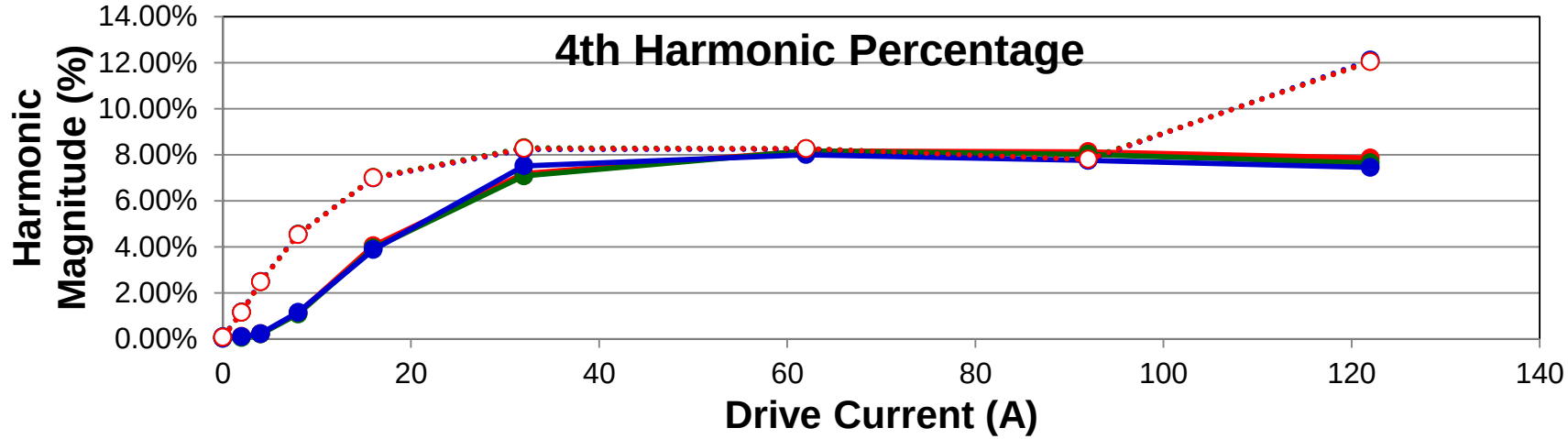

Overall Summary

- All test objectives were achieved
  - Removing the isolation at CITRC (Phase IVA, 2011) created a stiffer source for MFC-TS affecting voltage sag, current surge and harmonics measured across the test grid during Phase IVB,2012
  - Increased loading from 10% in IVA to 50% in IVB
    - > Grid Source and saturating transformers empirically prove to be dominating factors, not loading levels
  - New transformer diagnostics were successfully integrated
  - Protective relays were adjusted from IVA to represent realistic test grid settings
- Emprimus successful at blocking DC neutral current
  - Global configuration blocked all dc current thru all transformers
  - Local configuration diverted large current to Scoville/Antelope transformers

Limitations

- The unavoidable drive outside the testbed
  - Limited the current in the PENN
    - > It achieved 70% of ~120A vs 90% of ~125A in 2011
  - Halted the Emprimus test due to risk outside the testbed
- No instrumentation on the autotransformers at Antelope
  - Response of an autotransformer is more complex due to drive on both the primary and secondary
  - No empirical data for differential mode on the core

Recommendations

- Perform MHD-E3 experiment on Autotransformer
  - Empirically determine effects of injecting DC current directly in to autotransformer
  - Investigate floating an autotransformer
    - > Modeling effort
    - > Small grid experiment
- Increase instrumentation
  - Across the INL test grid
  - A more extensive current and voltage instrumentation further away from the point of injection to properly characterize dc current split
  - Include internal stress measurements (fields and temperatures)
- Move distribution loads farther away from the source
- Test at higher injected DC currents and at transformers normal operating temperatures