Geomagnetically Induced Current Considerations for Utility Studies

Thomas J. Overbye
University of Illinois at Urbana-Champaign
overbye@illinois.edu
August 28, 2013

ILLINOIS
UNIVERSITY OF ILLINOIS AT URBANA-CHAMPAIGN

PSERC

Geomagnetic Disturbances (GMDs)

- GMDs have the potential to severely disrupt operations of the electric grid by inducing quasi-dc geomagnetically induced currents (GICs) in the high voltage grid
- Until the last year or so power engineers had few tools to help them assess the impact of GMDs on their system
- GMD assessment tools are now moving into the realm of power system planning and operations engineers
  - GIC impact is certainly still an area of research, but tools are here now and are continuing to move forward
- Presentation presents application of such a tool and some recent research results

Geomagnetically Induced Currents (GICs)

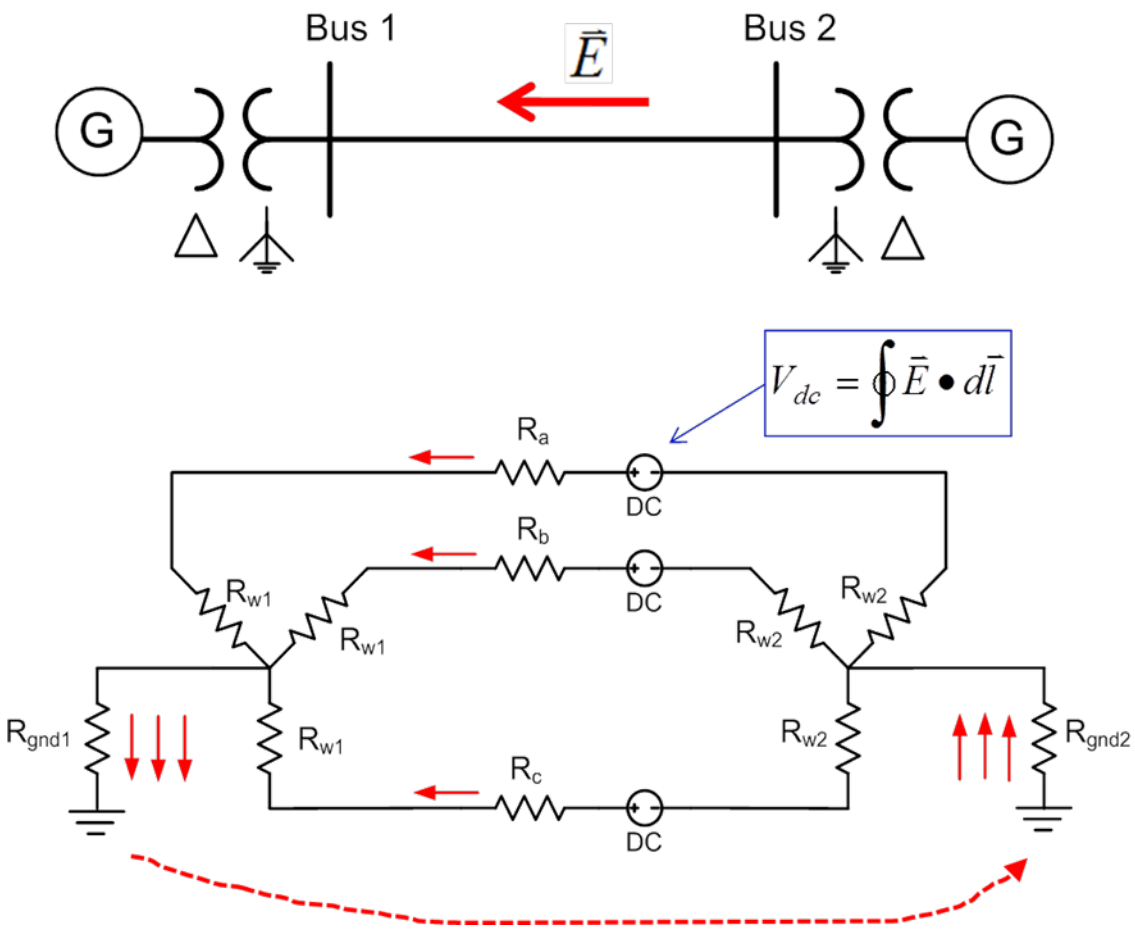

The impact of the GMD induced electric field is modeled as dc voltages superimposed on the transmission lines. The GIC calculation then just involves solving a linear dc circuits problem to determine the quasi-dc currents.

DC currents cause transformer half-cycle saturation, causing increased reactive power consumption

GMD Enhanced Power Analysis Software

- By integrating GIC calculations directly within power flow or transient stability power engineers can readily see the impact of GICs on their systems, and consider mitigation options
- GIC calculations use many of the existing model parameters such as line resistance. But some non-standard values are also needed; power engineers would be in the best position to provide these values, but all can be estimated when actual values are not available
  - Substation grounding resistance, transformer grounding configuration, transformer coil resistance, whether auto-transformer, whether three-winding transformer, generator step-up transformer parameters

Four Bus Example

$$I_{GIC,3Phase} = \frac{150\,\text{volts}}{(1+0.1+0.1+0.2+0.2)\Omega} = 93.75 \text{ amps or } 31.25 \text{ amps/phase}$$

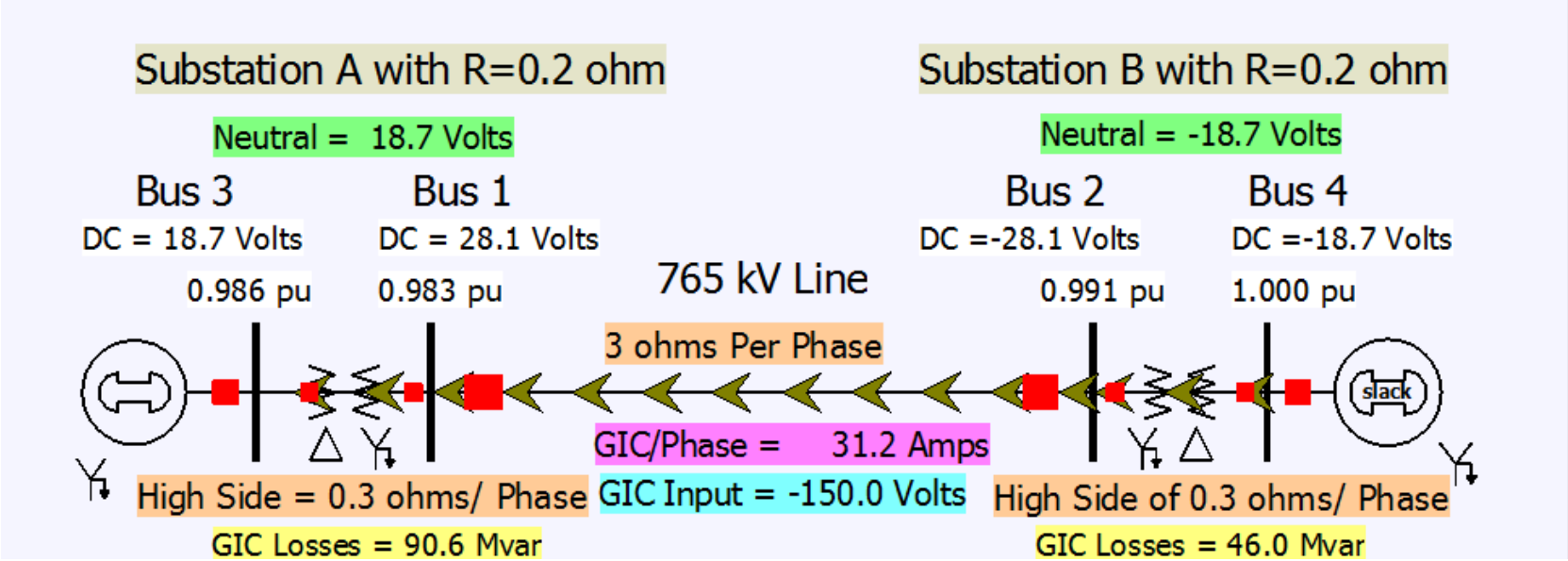

The line and transformer resistance and current values are per phase. Substation grounding values are total resistance. Brown arrows show GIC flow.

Goal: To Integrate GMD Assessment into Planning Process

- Overall goal is to make GMD assessment a standard part of the power system planning process
  - Ignorance is not bliss
  - The amount of risk can be assessed, and appropriate plans, including operating procedures and/or blocking, can be developed
  - Initial plans may involve the installation of monitoring equipment at locations identified by studies as having high GMD potential
- Tools need to meet the needs of power system planning and operations engineers
  - The tools should NOT require a PhD in Geophysics
  - There needs to be industry agreement on the appropriate input electric fields to study; this could involve multiple scenarios
  - As with all engineering studies, engineering judgment is needed to determine how much approximation is reasonable

GMD Assessment Software Evolution

- Initial packages were stand alone, not integrated into commercial power flow or transient stability
- In 2011 GMD assessment integrated into power flow
  - Uniform electric field assumption common
- More recently sensitivity analysis has been included
  - Sensitivity of GICs to input electric field assumptions (nearby lines provide vast majority of a transformers GICs)
  - Sensitivity of GICs to assumed substation grounding resistance (results indicate the values can be quite sensitive!)
- Much more detailed non-uniform electric fields are now being modeled
- Calculations are now also integrated into transient stability for possible dynamic considerations

GIC G Matrix

- With knowledge of the pertinent transmission system parameters and the GMD-induced line voltages, the quasi-dc bus voltages and flows are found by solving a linear equation

$$\mathbf{I} = \mathbf{G}\,\mathbf{V}$$

  - The G matrix is similar to the Y_{bus} except it is augmented to include substation neutrals, and it is just resistive values (conductances)
  - The current vector contains the Norton injections associated with the GMD-induced line voltages
- Factoring the sparse G matrix and doing the forward/backward substitution takes about 1 second for the 62,600 bus Eastern Interconnect Model

GIC Flows in Eastern Interconnect for a Uniform 2.5 V/Mile, North-South Field

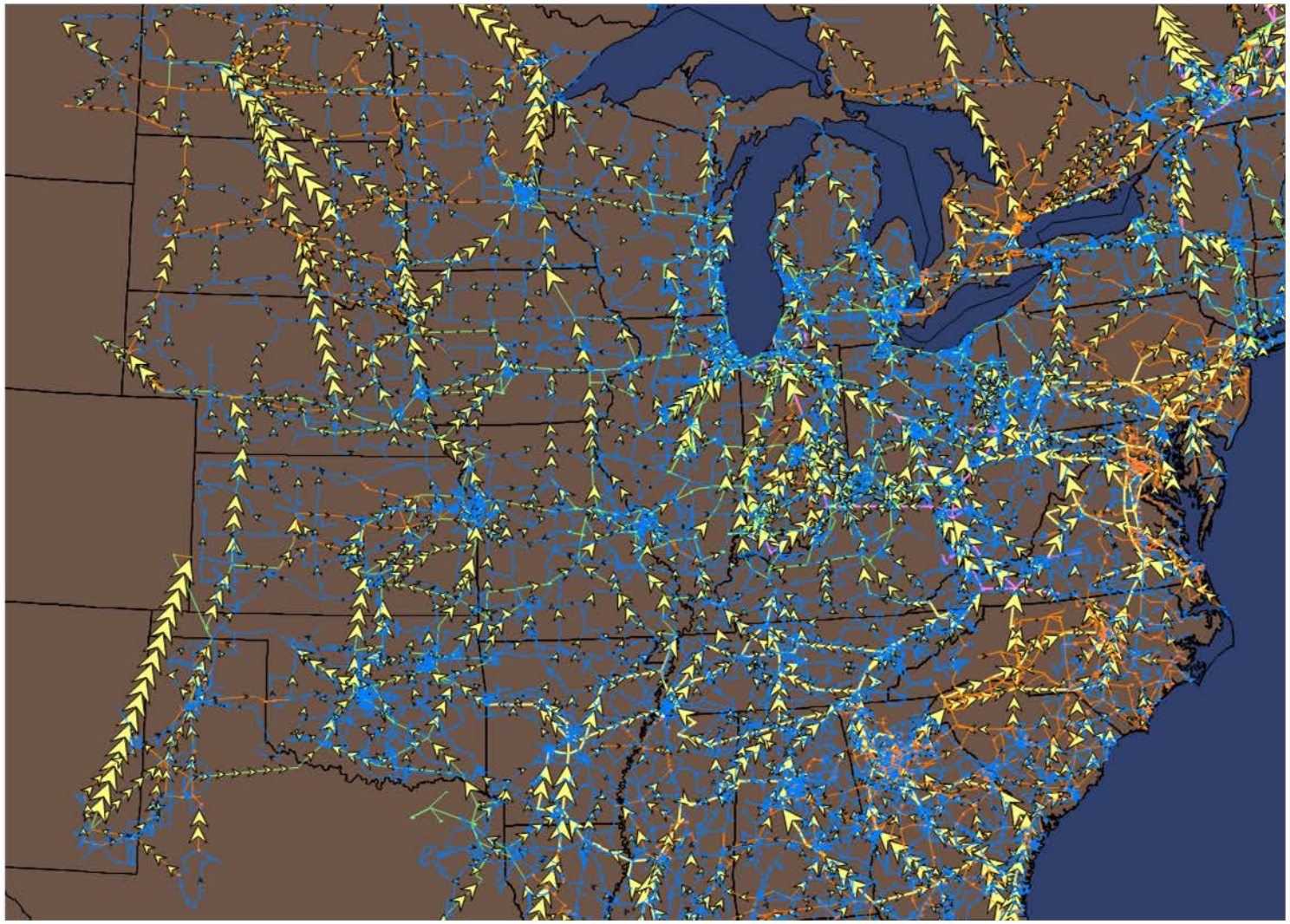

These flows are relatively easy to calculate, but studying such a GMD is probably not that realistic

Input Electric Field Considerations

- The current vector depends upon the assumed electric field along each transmission line
- With a uniform electric field determination of the transmission line's GMD-induced voltage is path independent
  - Just requires geographic knowledge of the transmission line's terminal substations
- With non-uniform fields an exact calculation would be path dependent, but just a assuming a straight line path is probably sufficient (given all the other uncertainties!)
- We need geographic scaling factors that depend on ground type and magnetic latitude
- Different values for different scenarios would be fine

GMD Non-uniform Field Simulation

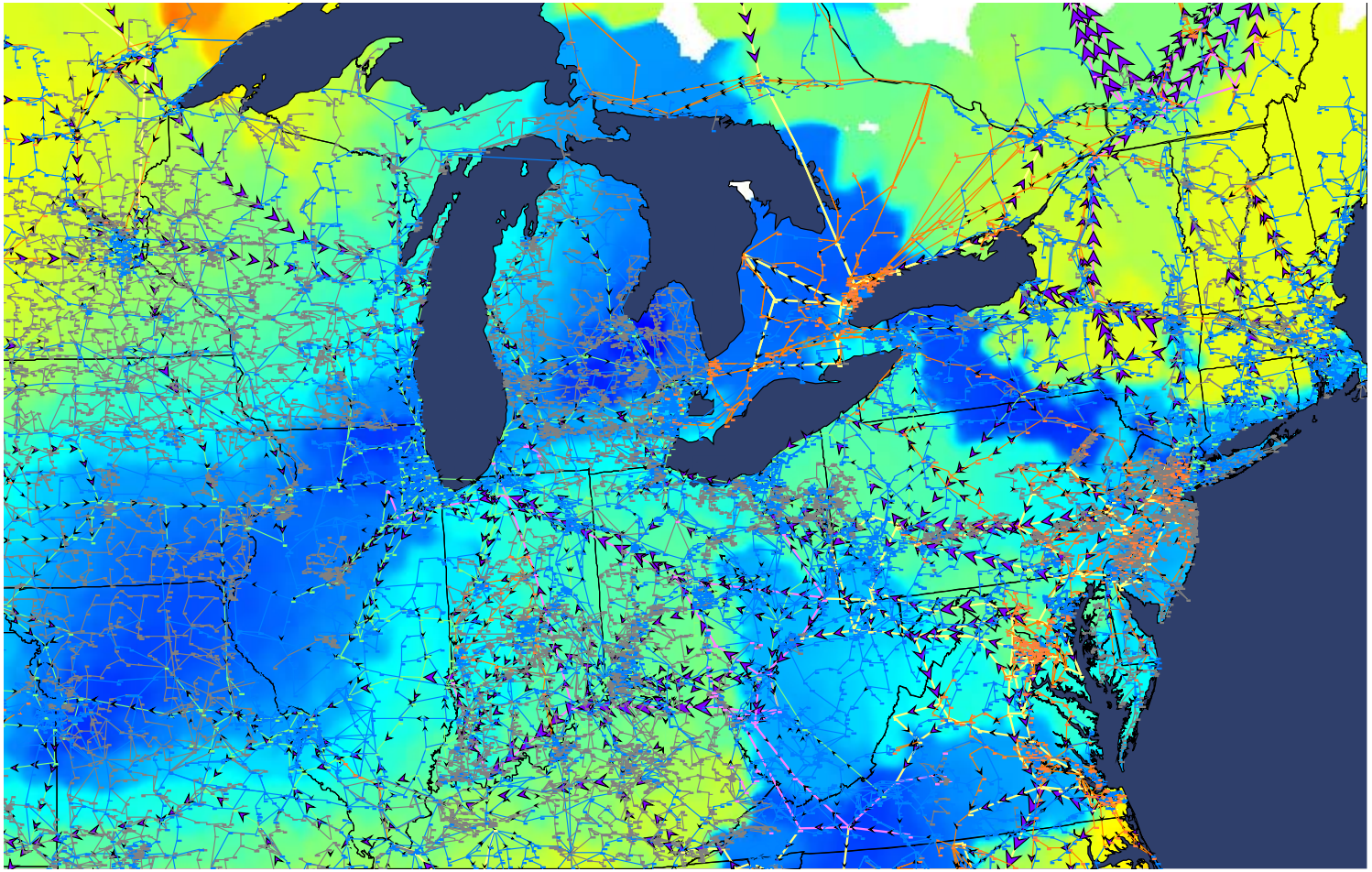

Color varies depending on the assumed electric field magnitude

G Matrix Considerations

- Data is needed at least for the study footprint and near neighbors
- Transmission line resistance values are readily obtained from the power flow cases
  - DC resistance is quite close to ac values; temperature dependence (0.4% per degree C) plays a role
- Estimates of transformer winding resistance can be obtained from the power flow cases
  - Usually whether they are auto-transformers can be determined
  - Whether device is a three winding transformer can usually be guessed (if not explicitly modeled)
  - Obviously actual coil winding resistance is best!

G Matrix Considerations, cont.

- Recent research has indicated that the GICs can be quite sensitive to the assumed grounding resistance; hence measured values are recommended
- The relative importance of a particular substation grounding resistance can be determined by comparing its value to the driving point resistance seen looking into the network at that location; these values can be computed quite quickly using sparse vector methods

$$\Re_i := \frac{R_i}{R_i + R_{TH,i}}$$

Ground Resistivity Sensitivity of EI Substations with Largest GICs

Table 5: EI substations with the largest GICs for a uniform eastward field

	Assumed grounding resistance (Ω)	GIC (A)	R_{TH}, (Ω)	$\mathfrak{R}$	V_{TH} eastward (V)
Sub. A	0.24	-294.85	0.38	0.39	-183.09
Sub. B	0.10	238.14	0.59	0.14	164.30
Sub. C	0.10	-228.69	0.08	0.54	-42.27
Sub. D	0.15	213.23	0.15	0.50	63.55
Sub. E	0.10	192.66	0.28	0.27	74.12
Sub. F	0.27	178.58	0.23	0.55	88.86
Sub. G	0.10	-151.93	0.11	0.49	-31.25
Sub. H	0.12	150.41	0.08	0.58	29.86
Sub. I	0.17	-144.39	0.10	0.63	-38.64
Sub. J	0.10	143.20	0.14	0.52	34.85

Higher script R values indicate more sensitivity; for more than one half the substation grounding resistances is most important value

Table source: U. Bui, T.J. Overbye, K. Shetye, H. Zhu, J. Weber, "Geomagnetically Induced Current Sensitivity to Assumed Substation Grounding Resistance," Accepted for Presentation at 2013 North American Power Symposium, Manhattan, KS, Sept. 2013

GIC Source Sensitivity Analysis

- Sensitivities of the effective GIC for a transformer (or set of transformers) to the assumed transmission line GMD-induced electric fields can be easily calculated
- Sensitivities are derived by first writing the effective GIC for transformer r in matrix form

$$I_{\text{Effective,r}} = \left|\mathbf{C}_r \mathbf{V}\right| = \left|\mathbf{C}_r \mathbf{G}^{-1} \mathbf{B}\, \mathbf{E}_T\right|$$

where **G** is the GIC conductance matrix, $\mathbf{E}_T$ are the input fields tangential to each line, **B** relates the voltages to the Norton current injections, and $\mathbf{C}_r$ relates the voltages to the effective current

- **G, B,** $\mathbf{C}_r$ are sparse, hence quick computation

GIC Sensitivity Analysis, cont.

- Sensitivities, telling which voltage inputs contribute to the current, are determined just by differentiating the previous equation

$$\frac{dI_{\text{Effective},r}}{d\mathbf{E}_T} = \pm \mathbf{C}_r \, \mathbf{G}^{-1}\mathbf{B} = \pm \mathbf{S}_{T,r}$$

- Each entry k in $\mathbf{S}_{T,r}$ tells how $I_{Effective}$ for transformer r would vary for a 1 V/km variation in the electric field tangential to the kth transmission line

Observations

- Because of sparsity the computation is trivial
- Simple scaling of entries in $\mathbf{S}_{T,r}$ accounts for nonuniform, nontangential fields
  - Simple summation tells which lines actually contributed to the value

$$I_{Effective,r} = \left| \sum_{k=1}^{K} \left(\mathbf{S}_{T,r}[k] \mathbf{E}_T[k] \right) \right|$$

$$= \sum_{k=1}^{K} \left(\mathbf{S}_{T,r}[k] \mathbf{E}[k] \cos(\theta_{k,E} - \theta_{k,L}) \right)$$

Four Bus Example

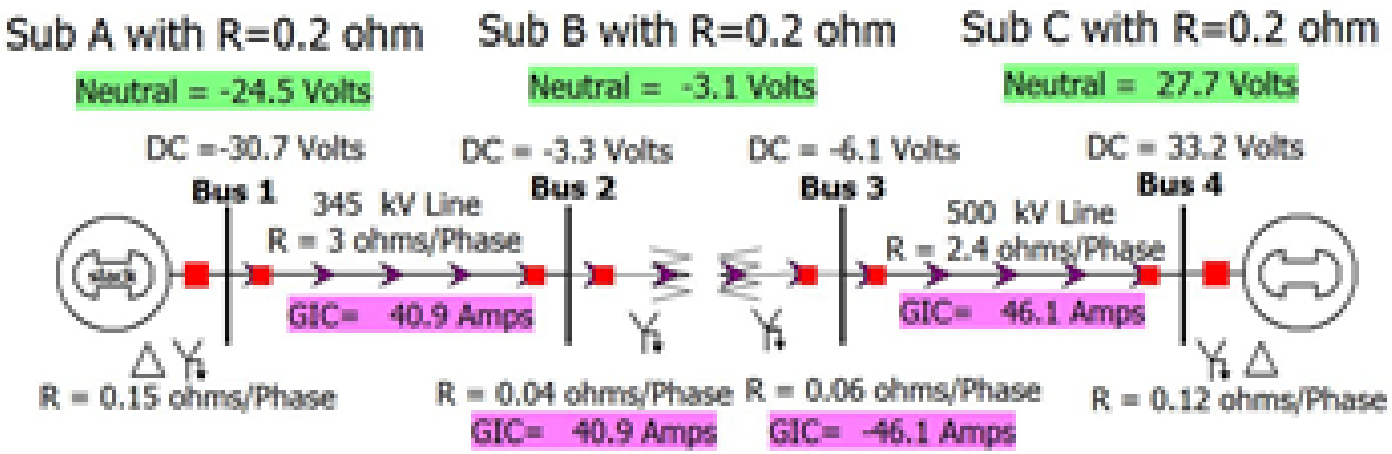

Transpose of $\mathbf{S_T}$ vectors for the four bus system

Transmission Lines↓	**Bus 1 GSU**	**Bus 4 GSU**	**Bus 2-3 Auto**
Line 1 -- 2	35.02	5.87	-18.30
Line 3 -- 4	5.87	40.25	36.21

Observations, cont.

- Sum of absolute values of entries in $S_{T,r}$ (i.e., the 1-norm) tells the worst case uniform field current that could occur in transformer r
- Define

$$\Lambda_r = \frac{I_{Effective,r}}{I_{\max,r}}$$

to quantify difference between actual current and the worst case current (low for interior values, high for edge values)

Twenty Bus Test Case Example

- Consider at XF 18-17 (upper left) and 20-5 (middle)

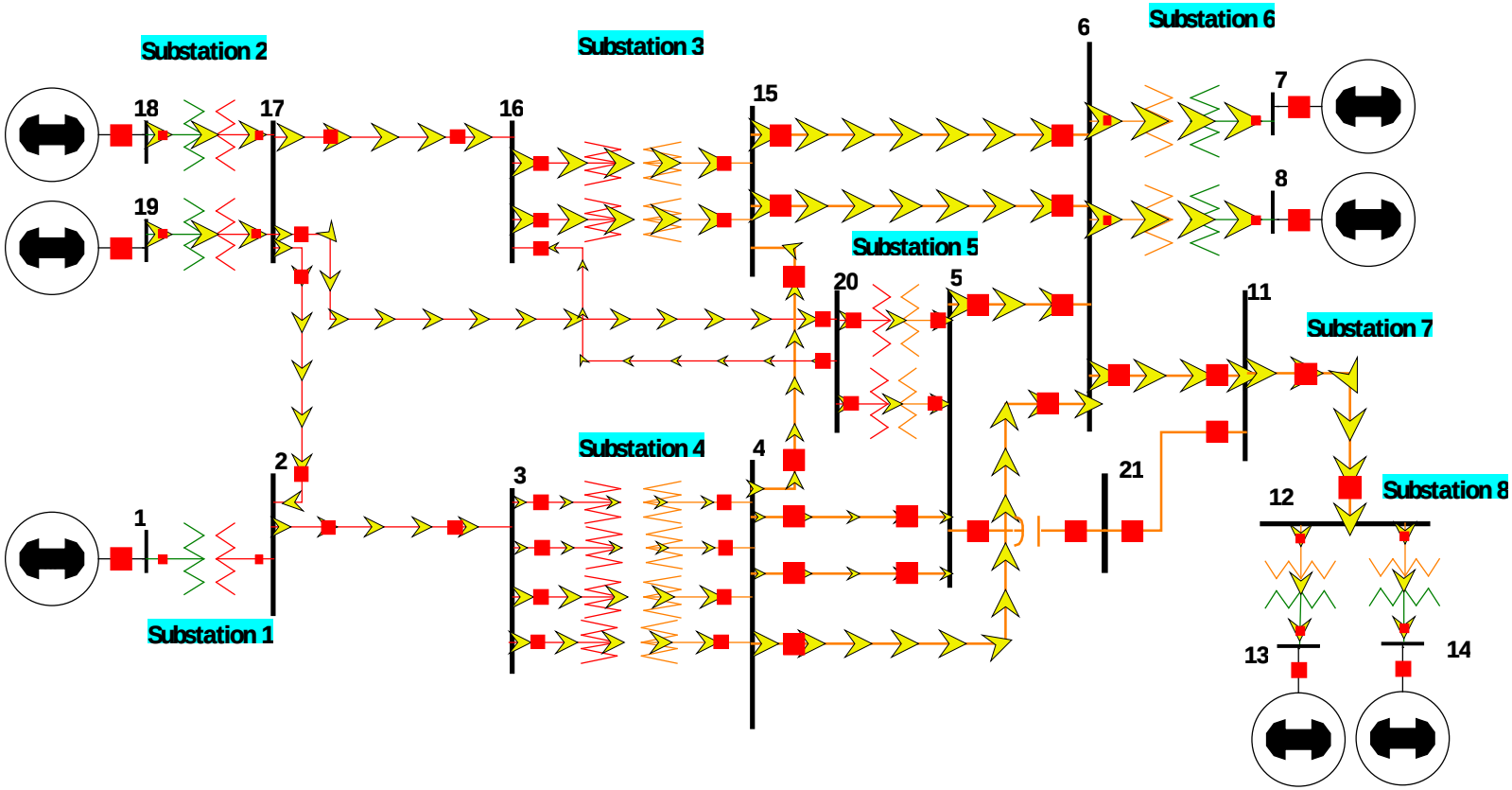

Twenty Bus Case Results

	T3, 18-17 Eastward	T3, 18-17 Max	T8, 20-5 Eastward	T8, 20-5 Max
$I_{effective}$	31.55	48.09	13.07	92.1
Line 2-3	5.82	5.84	-2.53	2.53
Line 2-17	-4.50	5.84	1.95	2.54
Line 15-4	0.62	0.65	8.07	8.55
Line 17-16	11.64	12.01	-0.79	0.82
Line 4-5,1	1.35	1.65	-11.38	13.95
Line 4-5,2	1.35	1.65	-11.38	13.95
Line 5-6	0.76	0.81	21.57	23.16
Line 5-11	0.00	0.00	0.00	0.00
Line 6-11	-0.05	0.25	-0.25	1.23
Line 4-6	2.46	2.47	9.19	9.21
Line 15-6,1	1.72	1.81	0.63	0.66
Line 15-6,2	1.72	1.81	0.63	0.66
Line 11-12	0.40	0.40	1.98	1.98
Line 16-20	0.01	0.46	-0.06	6.03
Line 17-20	8.27	12.45	-4.55	6.86

Extended to Multiple Transformers

- Analysis can be easily extended to multiple transformers by including their contributions in the **C** vector

$$\mathbf{C} = \sum_{r=1}^{R} \left(\pm \mathbf{C}_r \right)$$

$$\frac{dI_{\text{Effective}}}{d\mathbf{E}_T} = \mathbf{C}\,\mathbf{G}^{-1}\mathbf{B} = \mathbf{S}_T$$

Large Case Results

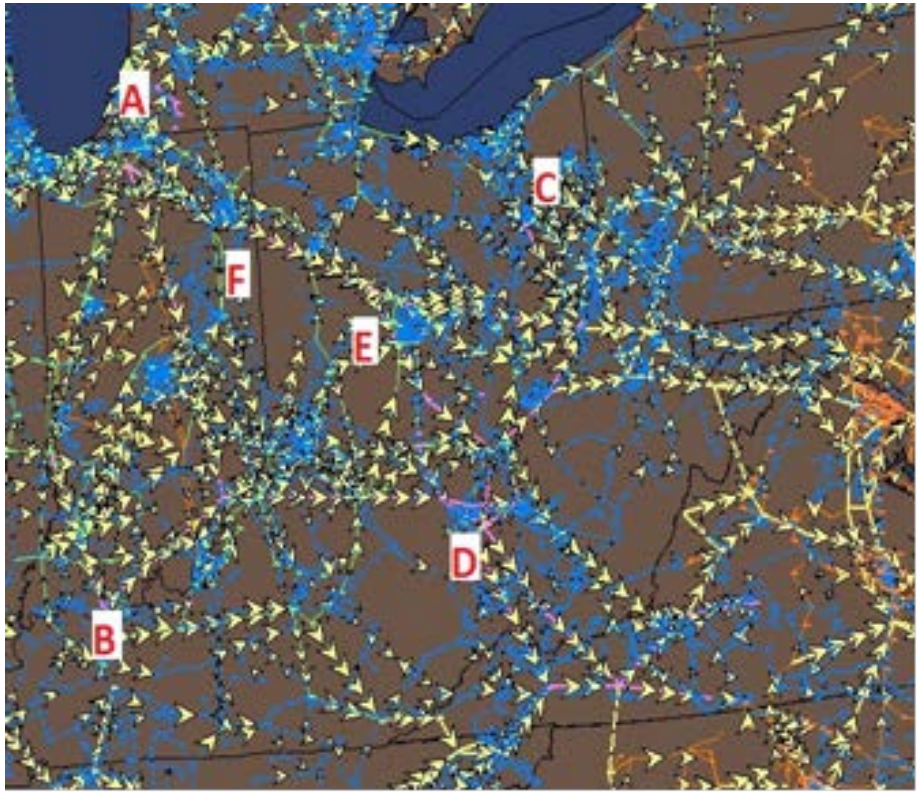

In the Eastern Interconnect example, usually very few lines contribute the GICs for each transformer

For AEP's 60 transformers with the largest effective currents about 50% of the GICs are contributed by just 10 lines (out of 57,000 in the case); 76% by just 20 lines; 99% by 1% of the lines

Conclusion is detailed electric field values are only needed for the contributing lines

Switching Gears: Load Modeling Considerations

- Whether a power system model experiences a static voltage collapse (maximum loadability) depends on the assumed load model
  - Constant power collapses quickest, whereas constant impedance is most robust

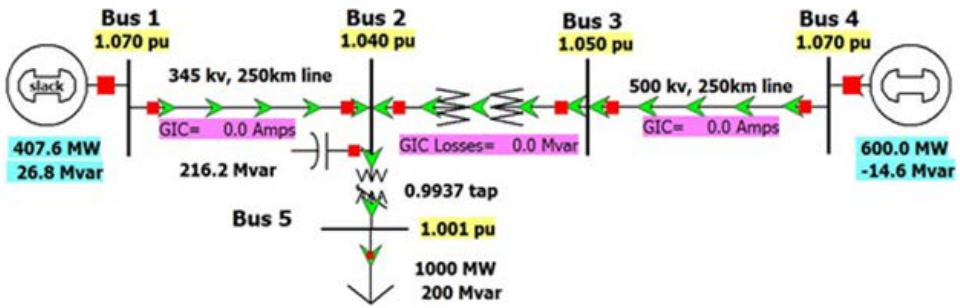

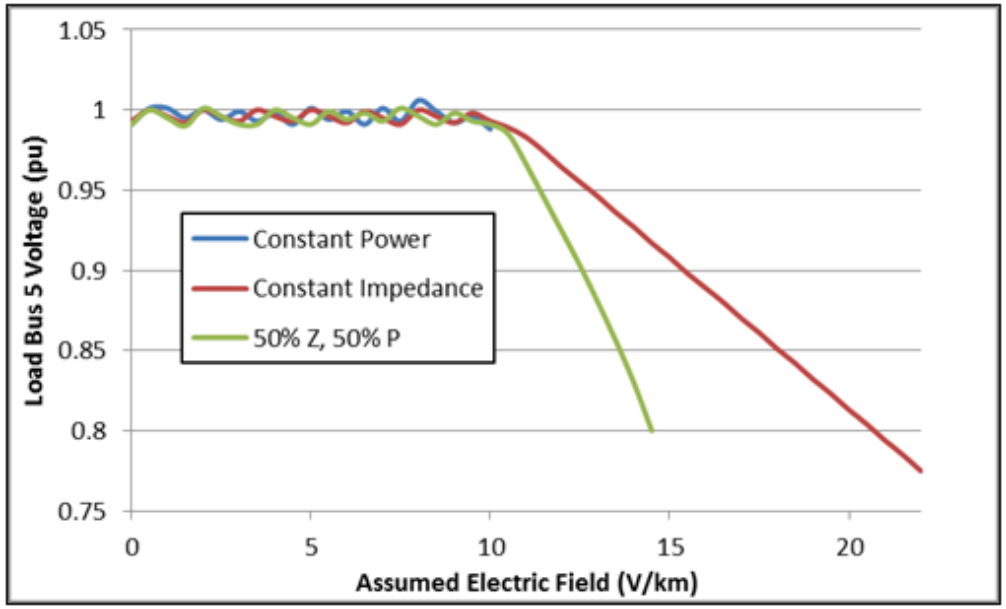

Dynamic Modeling Considerations

- Dynamics are considered by included GICs in transient stability
- With electric field rise times of more than a few seconds key dynamics are associated with the loads and the LTCs
  - Below figure shows transient stability results for a ramp of electric field from 0 to 20 V/km with a constant impedance load model; final voltage closely matches power flow results

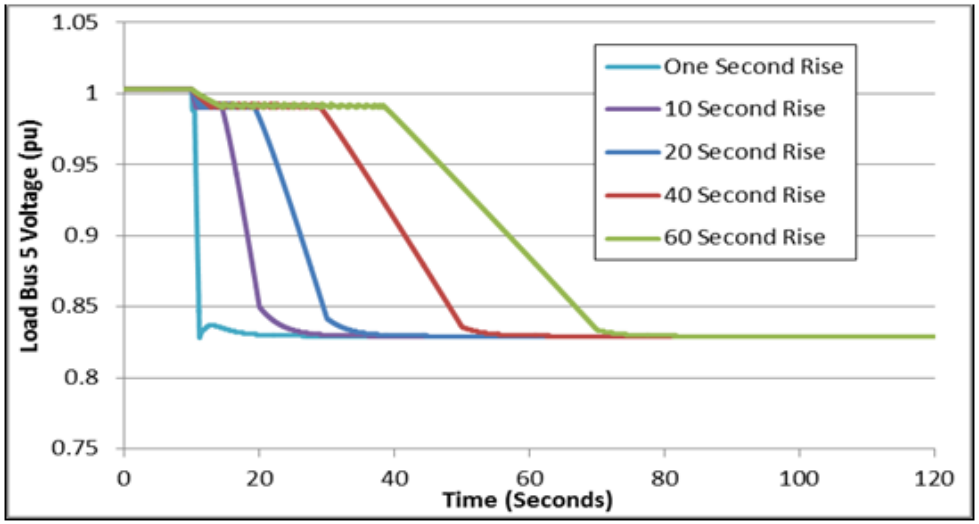

Load and LTC Model Impacts

- Voltage collapse occurs sooner when the load model includes induction motors, and sooner still when LTC delays are considered. Results for 40 second ramp

Contrast with power flow collapse of 10 to 20 V/km!

CLOD Model, Fast LTC

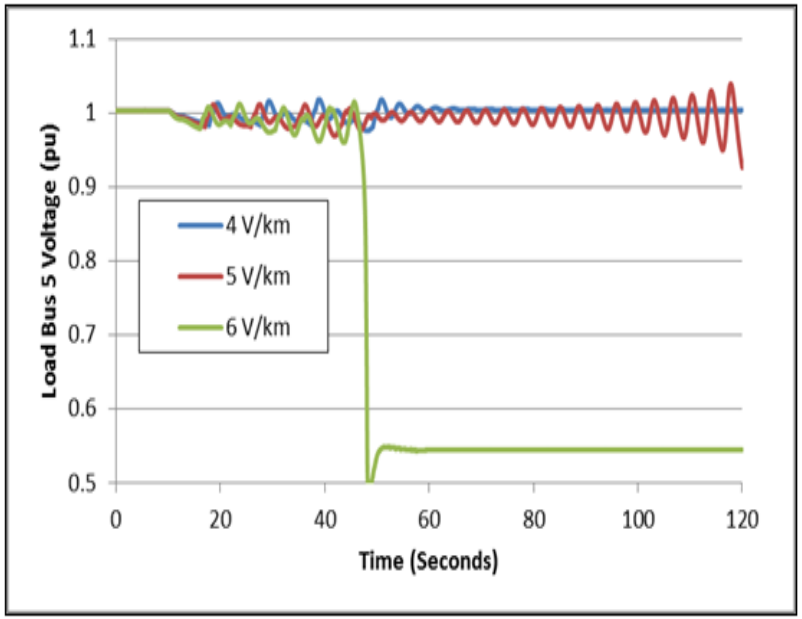

CLOD Model, 30 LTC Delay

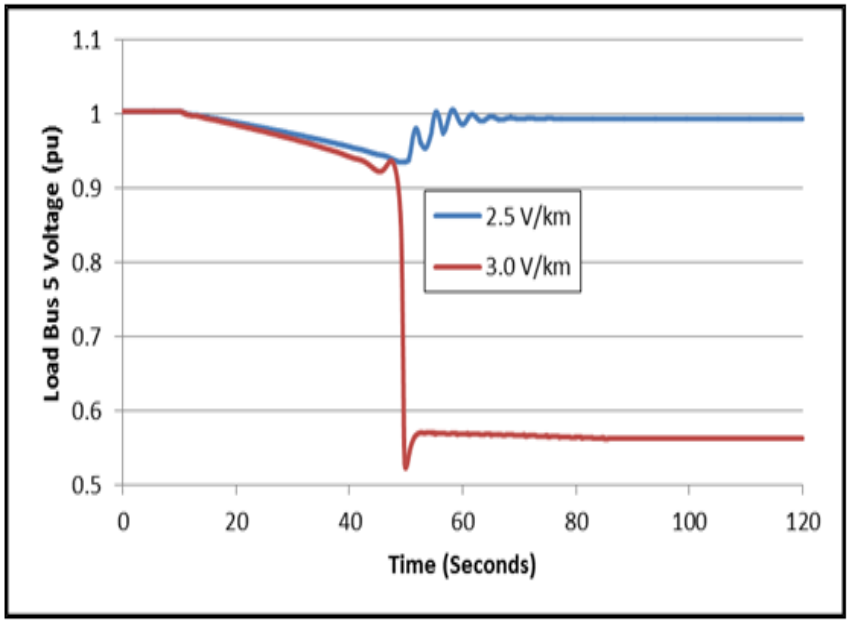

Conclusions

- GIC impact assessment has progressed to point at which it can be treated like other engineering problems with a cost/benefit assessment
  - There is lots of uncertainty, but we work in an industry with lots of uncertainty!
- Getting started with GIC assessment can be relatively straightforward, consisting of doing GIC enhanced power flow studies
  - Can be used to determine mitigation strategies and locations for monitoring equipment
- More advanced analysis techniques, including non-uniform fields, sensitivity analysis and dynamic considerations are becoming available

Thank You!

Questions?