ABB

SEL SCHWEITZER ENGINEERING LABORATORIES

Presentation to
INL - GMD Workshop
27-28 July 2013

SolidGround™ Transformer Neutral Blocking System

Transformer Neutral Blocking Protection System

emPRIMUS™
PROTECTION RATHER THAN RECOVERY

Agenda

- SEL Control & Monitoring Electronics
- SolidGround™ Transformer Neutral Blocking System Update
- Spark Gap & Thyristor Options
- System Testing at the Idaho National Laboratories (INL)
- Univ. of Manitoba Grid Impact Studies
- Power World Modeling of ATC Network
- SolidGround™ Installation at ATC Update
- Response to July IEEE Power & Energy article on GMD

SEL Control & Monitoring Electronics

SEL – 2240 Axion™ Platform with Patented Software

Primary Functions:

- Quasi-DC GIC Sensing
- Harmonic Sensing
- Solid Ground AC & DC Breaker Control
- Monitoring Functions:
  - Breaker Positions
  - Multiple CT Inputs
  - Multiple Voltage Inputs
- Comm. with SCADA system

SEL Electronics Successfully Tested with a SolidGround™ Neutral Blocking System

DC Current Blocking System Diagram with Spark Gap Option

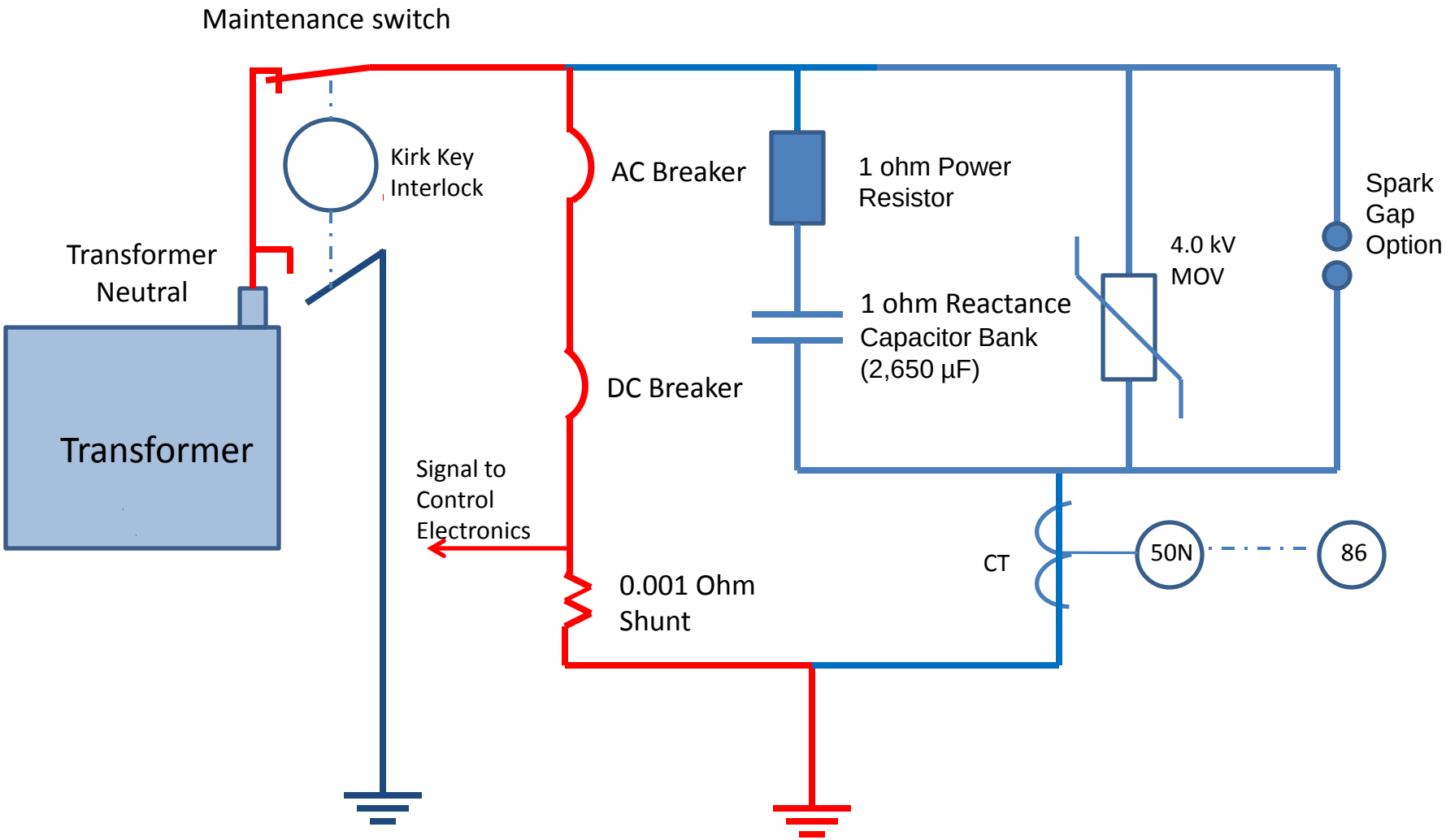

High Current Spark Gap Options

Protection if the ABB Breakers fail to close

- Durable Graphite Electrodes
- 10 kV Breakdown
- 22 kA rms for 8 cycles
- 60 kA peak
- Initial Testing Completed
- Triggered version to be tested at KEMA

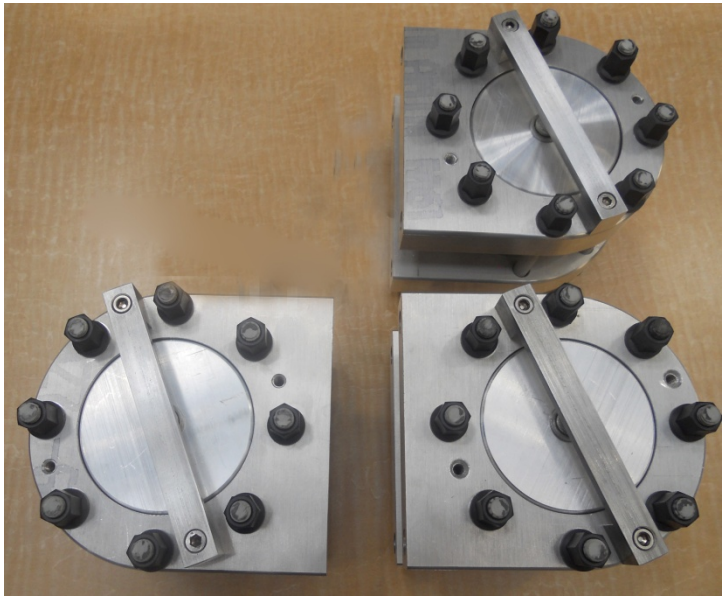

Three Graphite Electrode Spark Gaps

Ready for Ground Fault Testing at KEMA in September

Solid Ground Thyristor/ Spark Gap Version

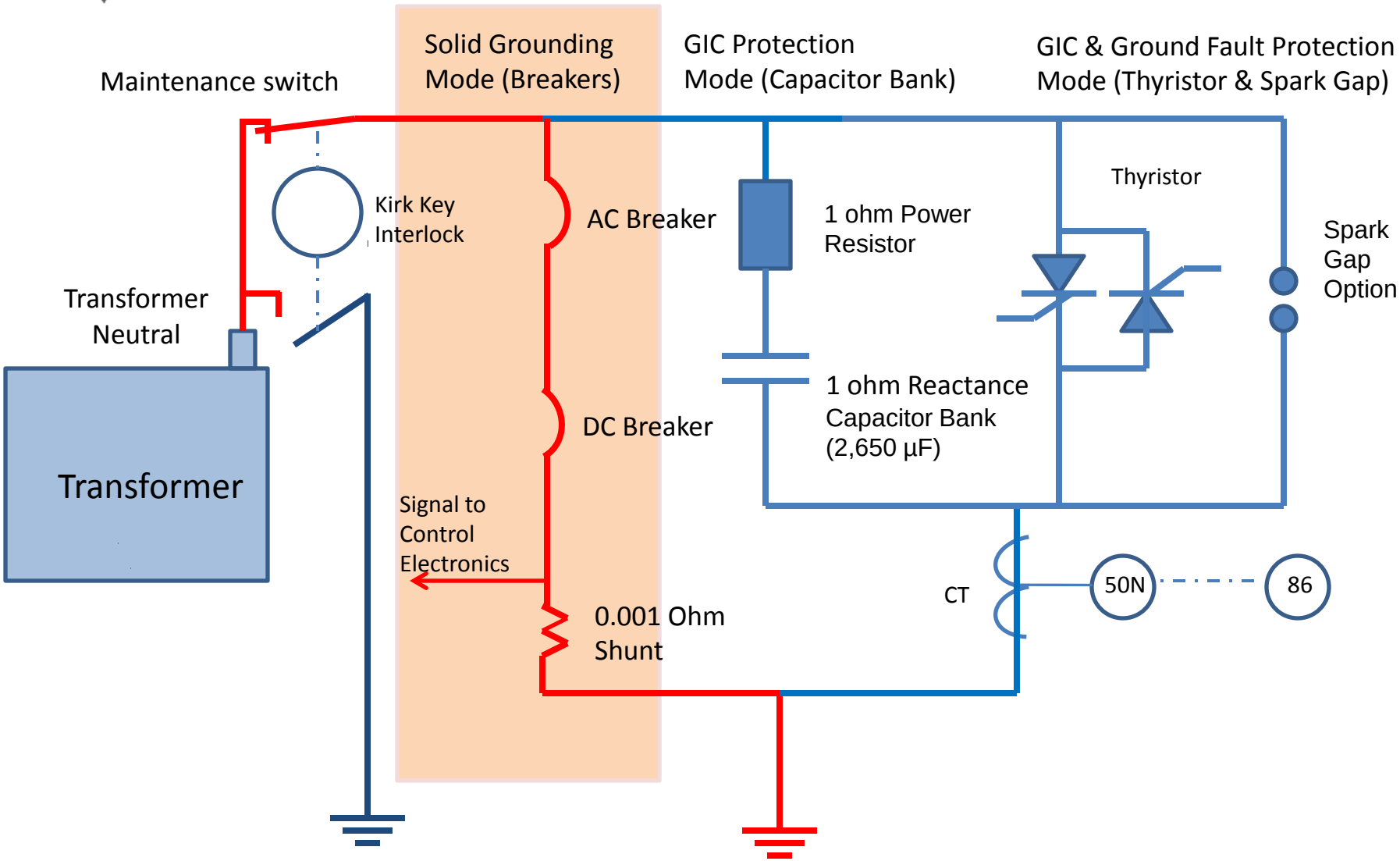

Solid Ground Thyristor/ Spark Gap Version

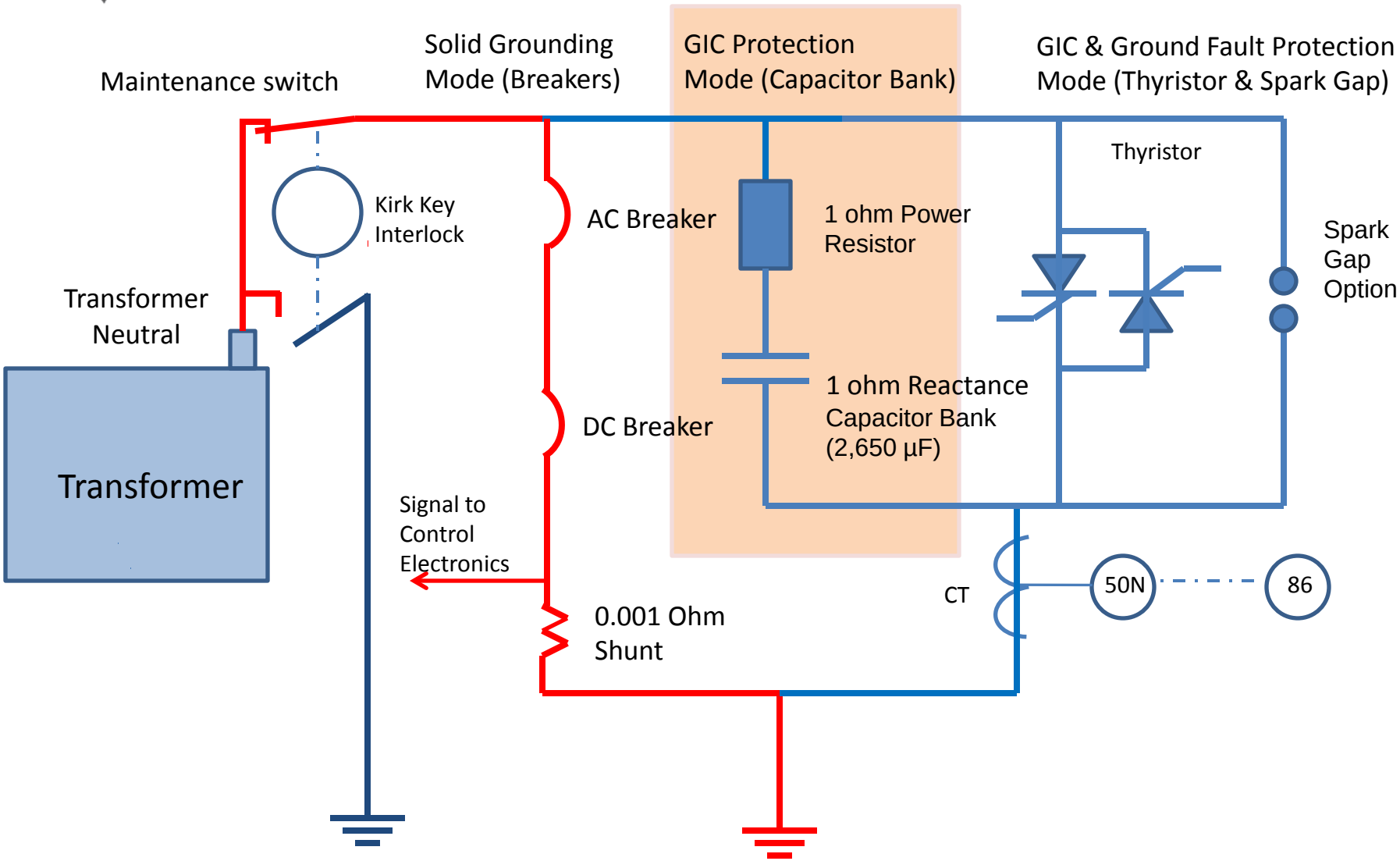

DC Current Blocking System Diagram

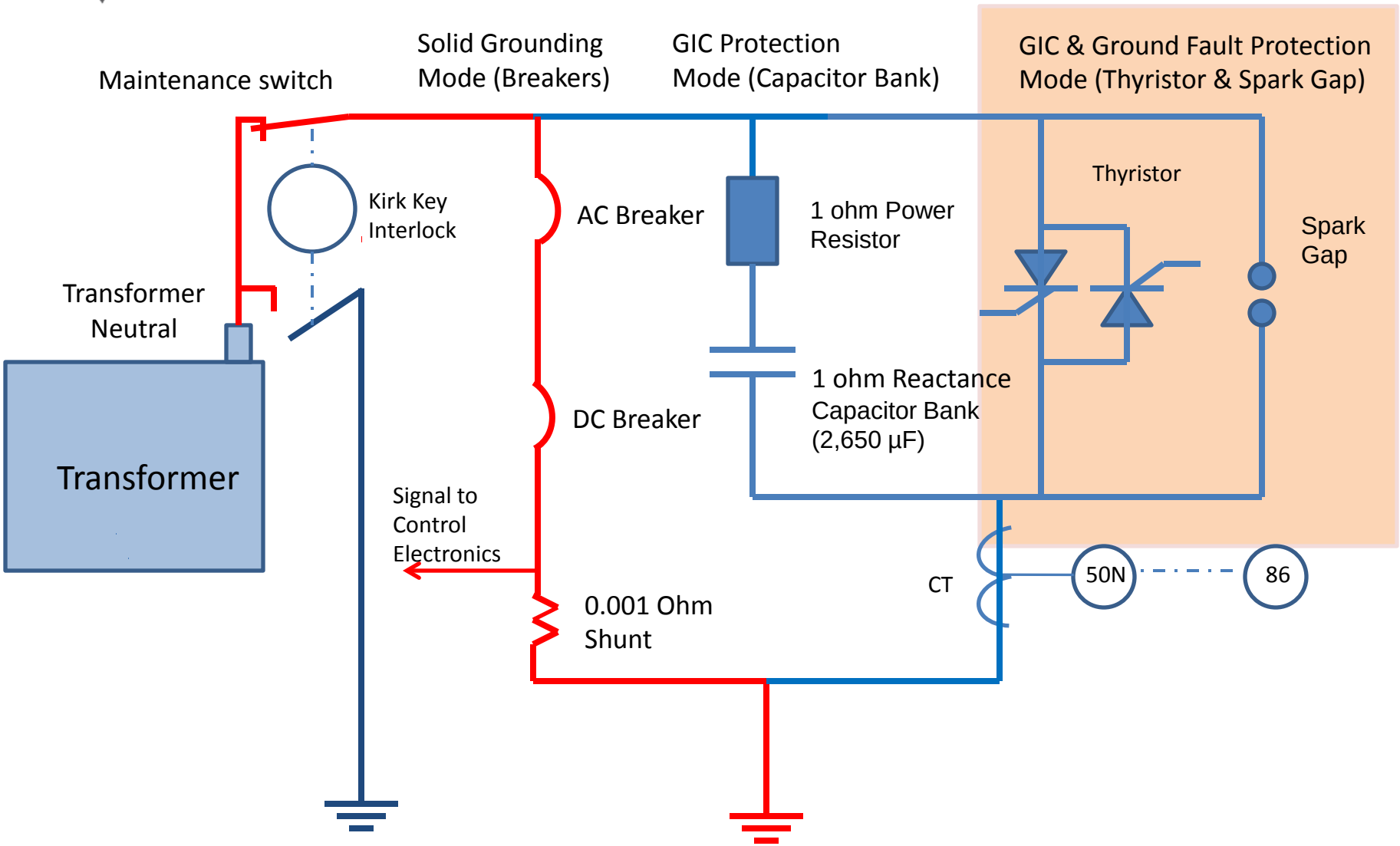

ABB Matched Thyristor Option

- Parallel SCR Matched Array (six units)
- 33 kA rms symmetrical
- 92 kA peak asymmetrical
- Duration 8 cycles
- Triggered-on (< 3 µSec) when ground fault current is detected
- Reliably applied in the industry for decades

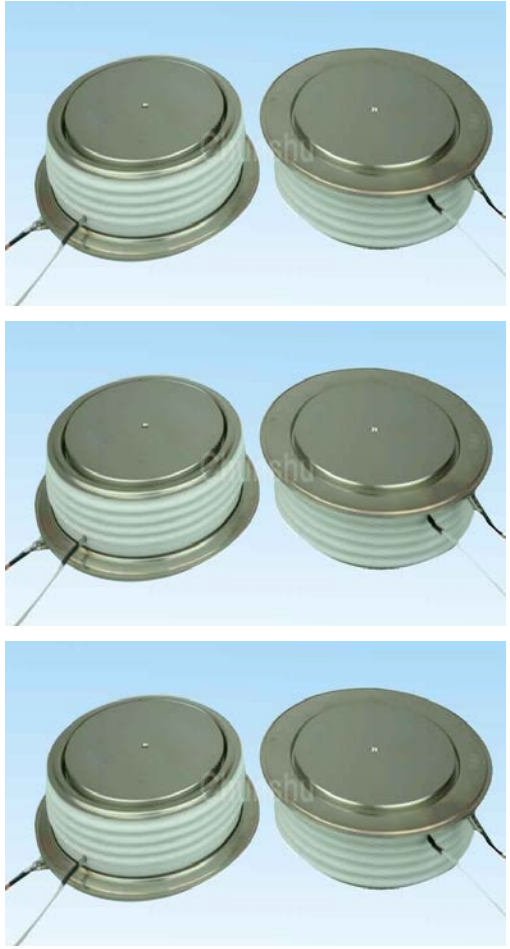

Replaces MOV as non-expendable fault protection device

SolidGround™ Neutral Fault Current Capability

I_A = Transformer Available Neutral Fault Current

I_S = Secondary Full Load Current

Z = Transf. per unit Impedance

$I_A = I_S / Z$

Example Case:

Transformer 345kV, 600 MVA, 3 phase

I_S = 1,000 Amps single phase

Z = 6 %

I_A = 16,667 Amps

Assuming an infinite bus source

SolidGround™ System Fault Current Capability is 22,000 Amps

SolidGround Operation has been Validated

Software Simulation Modeling at the Univ. of Manitoba

Before

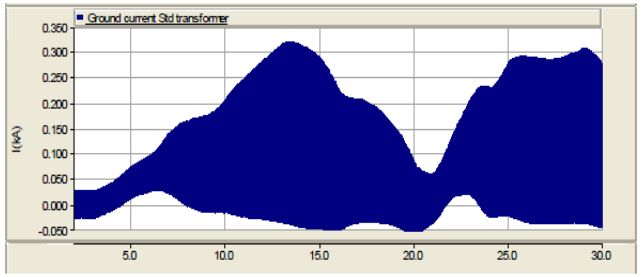

After

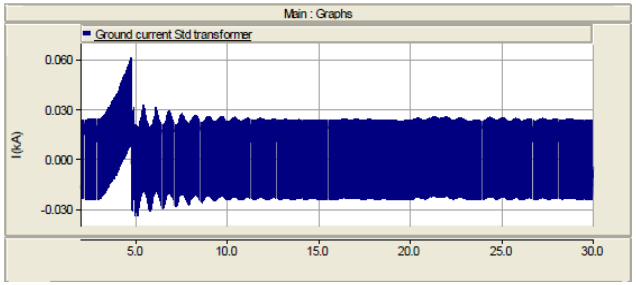

High Voltage Ground Fault Current Testing in Phil. PA

- Passed 20 k Amp Fault Testing

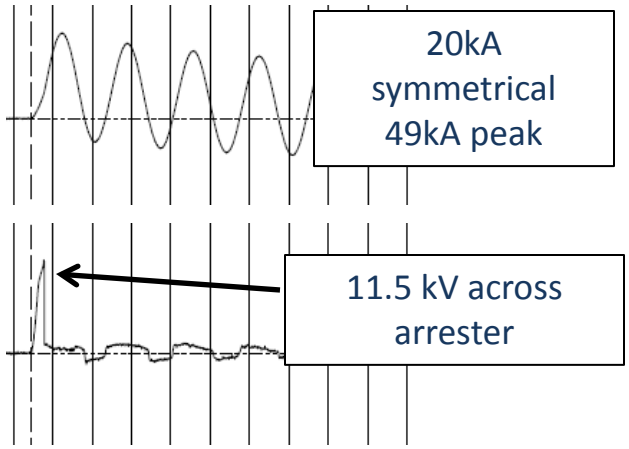

Idaho National Laboratory Grid Experiment

- System Worked as Expected
- Blocked Injected DC Current when Detected by Electronics

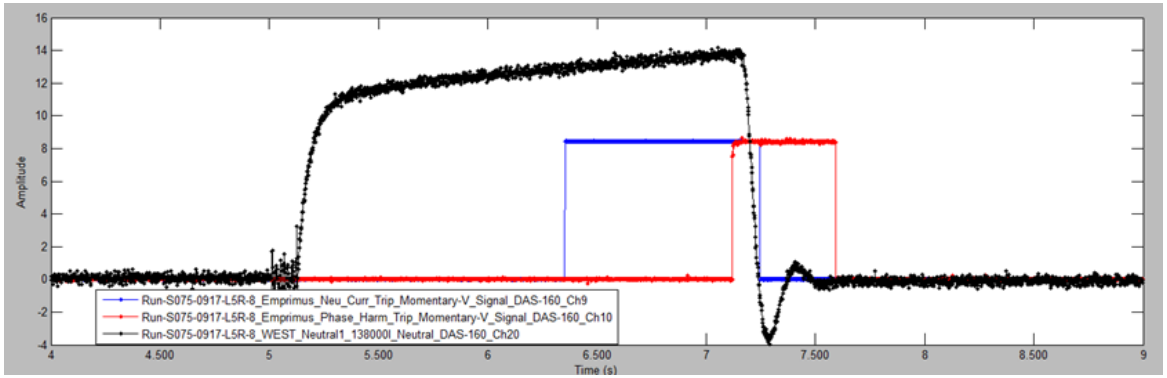

Live grid operation at Idaho National Lab

SolidGround™ was placed in service in the grid on INL's site and to prove out its beneficial GIC-blocking effects.

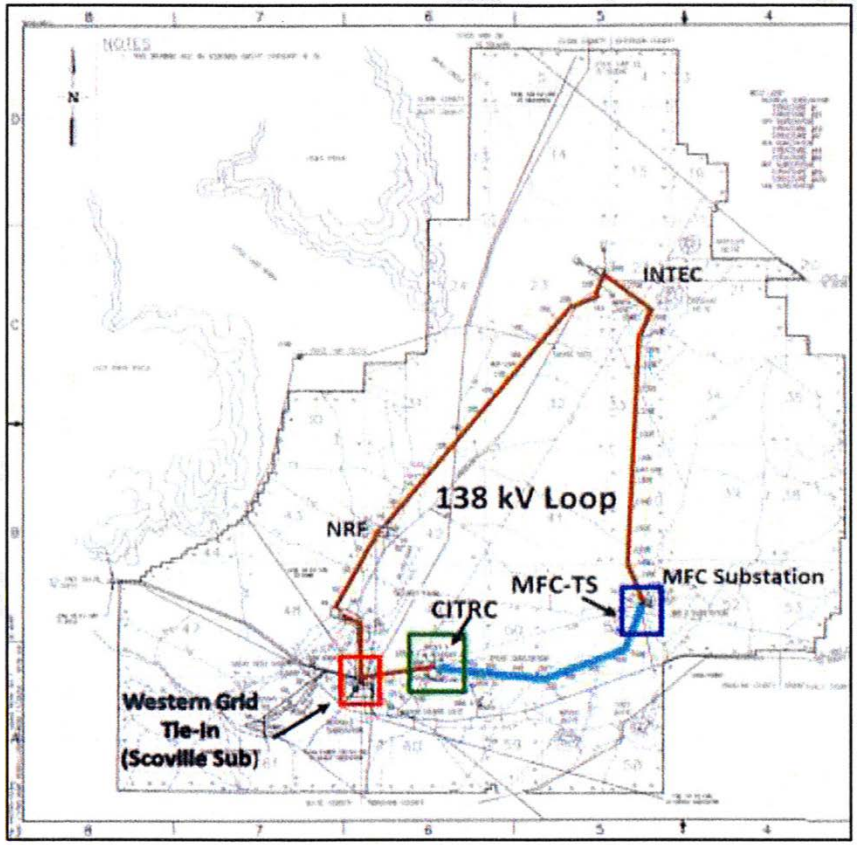

Experiments were performed at INL, executed by SARA, under the direction of DTRA

Live grid operation at Idaho National Lab (INL)

SolidGround Testing Configuration:

- Two WYE-DELTA transformers (15 MVA & 3.75 MVA)
- Testing Grid, 138 kV 61 mile loop, with connection to the western interconnect
- Both transformer neutrals subjected to injected DC currents
- Neutral Blocking was applied to both transformers when either the DC current or line harmonics were detected

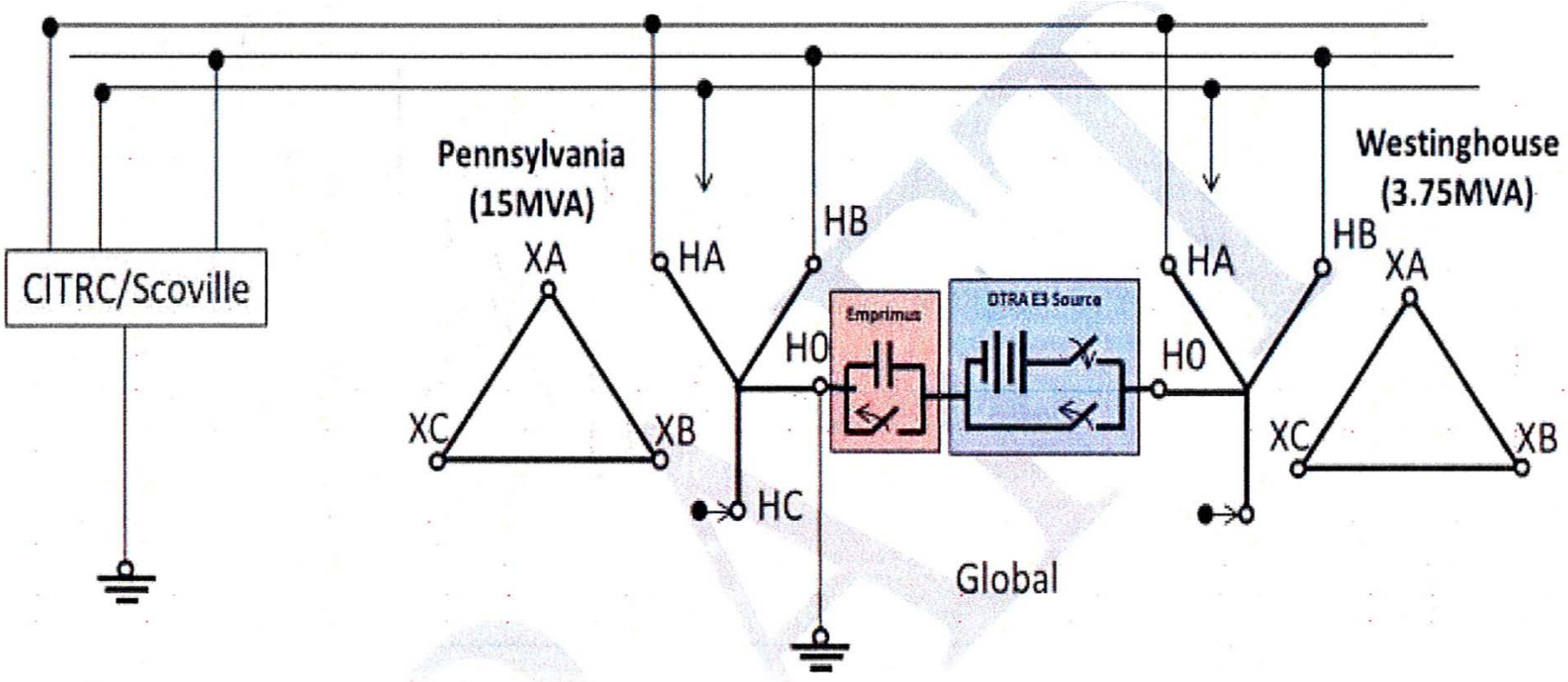

Live grid operation at Idaho National Lab

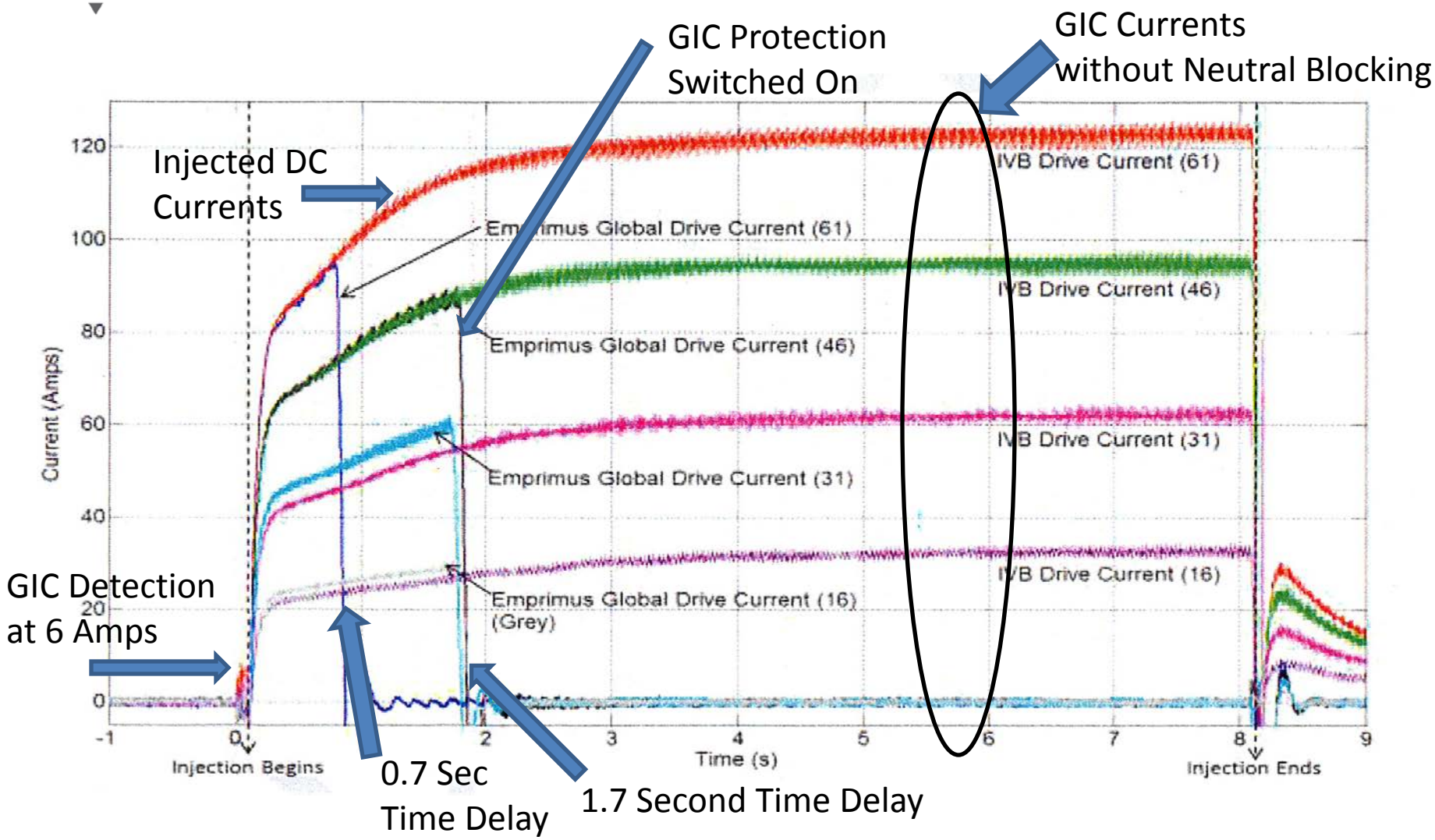

"The Emprimus SolidGround™ detected and activated to interrupt DC current flow into the transformer neutrals."

Univ. of Manitoba Transformer Neutral Grounding Impact Studies

Objective: Study several potential impact issues related to placing neutral blocking devices in a network, these studies were the following:

#1 – Line Switching Over Voltages Study

- Objective – Compare the magnitudes of Over Voltages with and without a Capacitive GIC blocking device for various line switching scenarios

#2 – Effective Grounding Study

- Objective – Determine if GIC Neutral Blocking Capacitors will meet the IEEE standard (C62.92.1-2000) for Effective Grounding in Power Systems (i.e. $3 > Xo/X_1 > 0$ and $1 > Ro/X_1 > 0$)

#3 – Network Resonance Study

- Objective – Determine the impact of neutral blocking capacitors used for GIC blocking on network resonances at both (i) harmonic and (ii) sub-synchronous frequencies

No appreciable difference between solidly grounding and SolidGround™capacitive grounding were observed

Univ. of Manitoba Transformer Neutral Grounding Impact Studies – cont'd

#4 – Fault Currents & Operation of Protection Elements Study

- Objective – Determine the impact of neutral blocking capacitors on (i) Fault current levels during SLG & LLG faults and (ii) impact to operation of distance and directional protection elements during SLG and LLG faults

#5 – Arrester (MOV) Breakdown Impact Study

- Objective – Determine the impact of a sudden short circuit on the transformer terminal voltages

No appreciable difference between solidly grounding and SolidGround™ capacitive grounding were observed

Univ. of Manitoba Studies Network
#2 - Effective Grounding

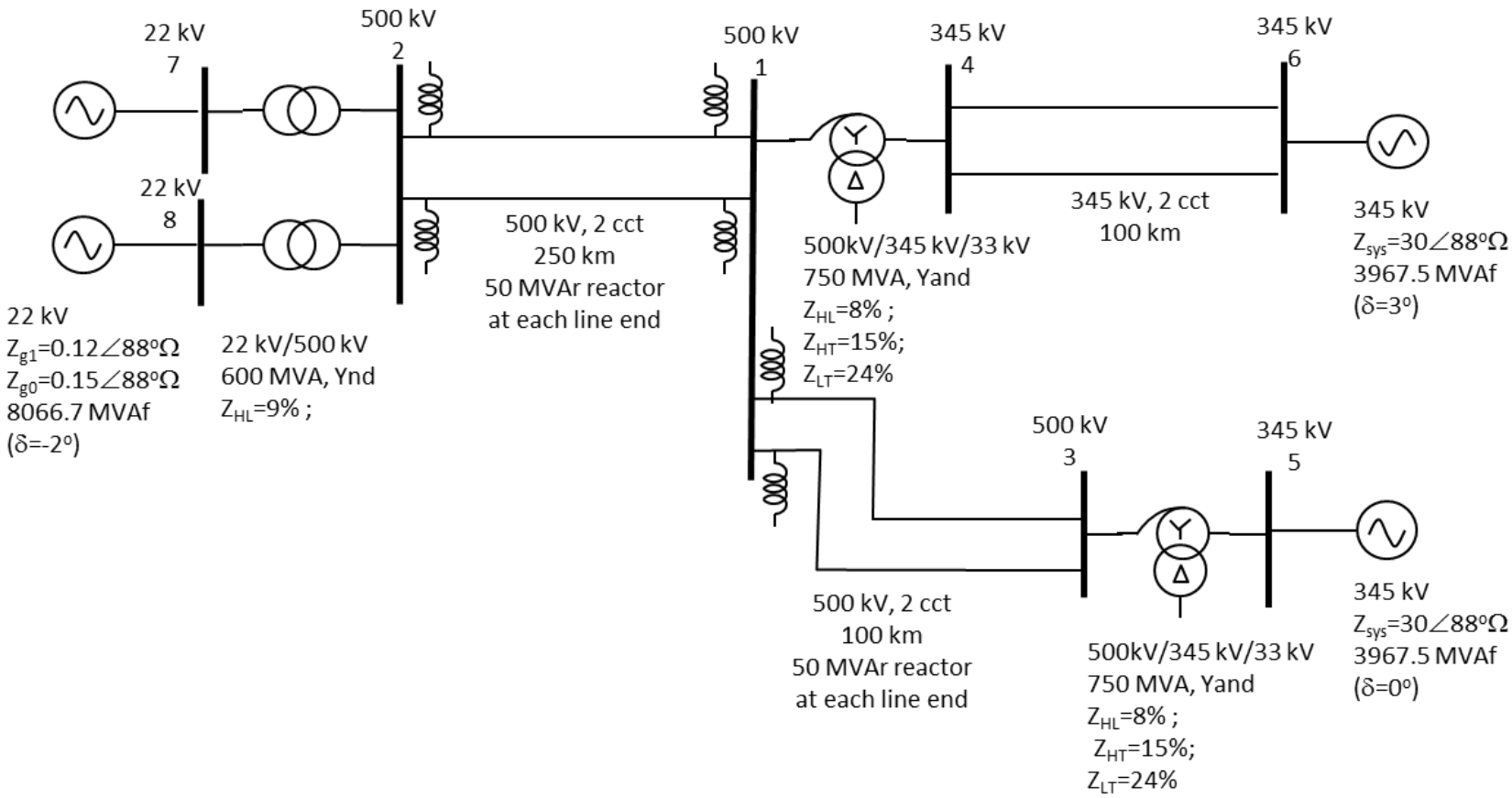

"For all five scenarios studied, the ratio Xo/X1 remains positive and well below three (3). Also, the ratio Ro/X1 remains positive and less than one(1),….."

GIC Grid Modeling

- PowerWorld has added geomagnetic induced current (GIC) analysis to their power flow analysis
  - Provides analysis to help answer questions concerning:
    - grid instability from increased transformer reactive (MVAR) losses
    - Identifies locations of potential damage to critical infrastructure (i.e. transformers, SVCs, etc.)

GIC Modeling – cont'd

ATC (Wisconsin Grid) Approach:

- Requested transformer data from ATC for large Auto-transformers, GSUs and network parameters
- Analyzed PowerWorld model to reflect correct transformer, network configurations and input data
  - 794 Transformers
  - 350 where Grounded Transformers

	Number in category
auto	70
gsu	42
auto-69	124
gsu-peak	54
gsu-small	17
hydro	28
wind	5
dist	454
unknown	0
total	794

Network Priority for Neutral Blocking – Transformers with highest GIC, five at a time

1st Five Transformers	2nd Five Transformers	3rd Five Transformers	4th Five Transformers	5th Five Transformers
GSU Station C 345/22 #1	GSU Station **B** 345/19 #1	Substation E 345/138 #1	Substation E 138/13 #1	Substation OC 345/138 #2
GSU Station C 345/22 #2	Substation C 345/138 #2	Substation E 345/138 #2	Substation K 345/138 #1	Substation A 230/115 Kv Substation 345/230 #1
GSU Station B 345/19 #1	Substation S 345/138 #1	Substation K 345/138 #2	Substation C 345/138 #1	Substation SF 138/69 #1
GSU Station E 345/22 #1	Substation WM 345/138 #1	Substation SL 345/161 #1	Substation C 138/69 #1	Substation OC 345/138 #1
GSU Station K 345/20 #1	GSU Station E 345/22 #1	Substation C 345/138 #3	Substation SG 138/25 #1	GSU FW 138/35 #1

- Modeling and analysis shows highest priority for neutral blocking devices are:
  - GSUs, first down stream Auto-Transformers and SVCs (i.e. step-down xformers)
  - All transformers at a given site should have neutral blocking
- One SolidGround™ unit can protect from one to three transformers at a site

ATC Grid Voltage Collapse vs GMD Fields

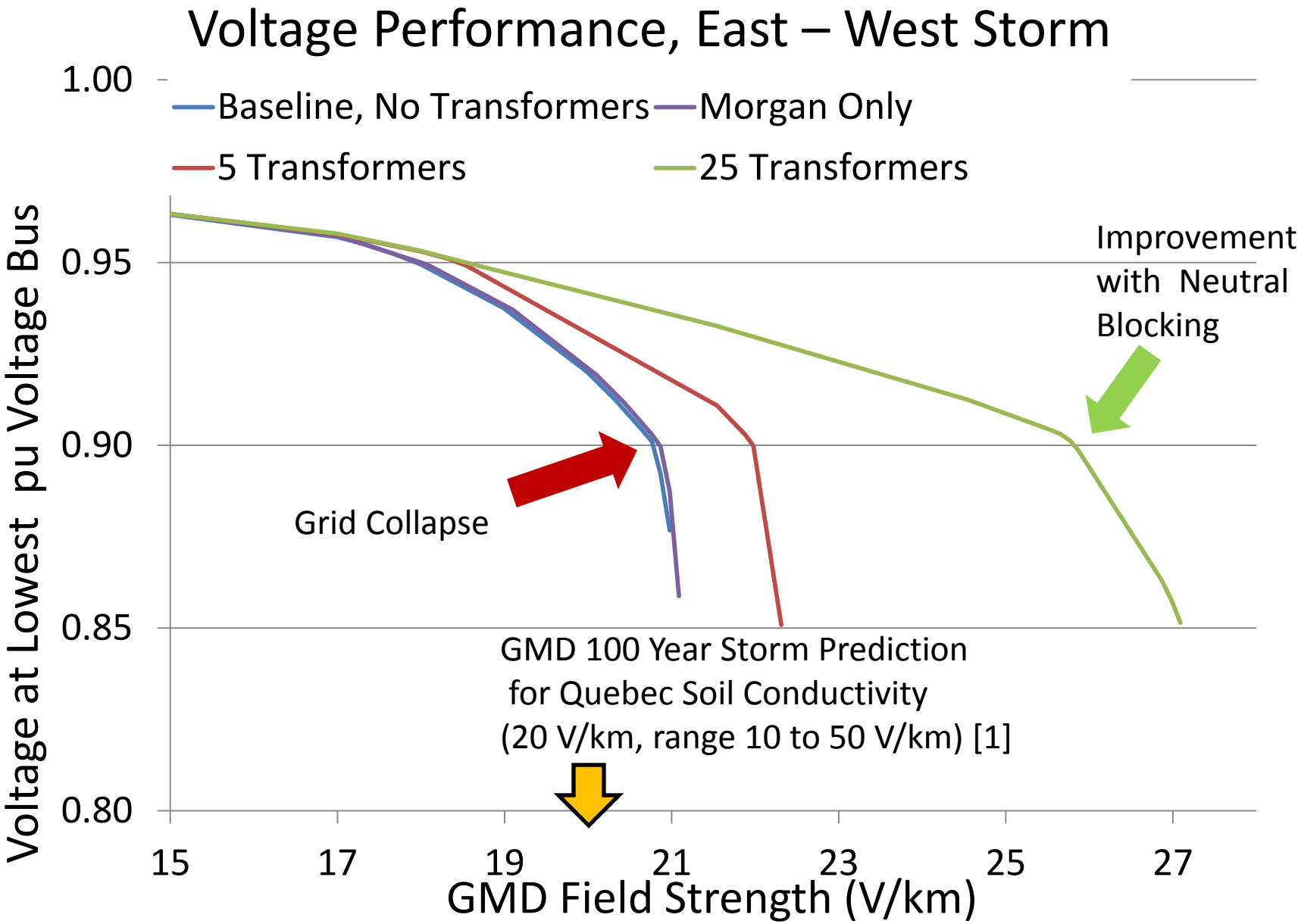

[1] Estimates from A. Pulkkinen et.al. are from Space Weather publication in 2012

Total GIC & MVAR Losses

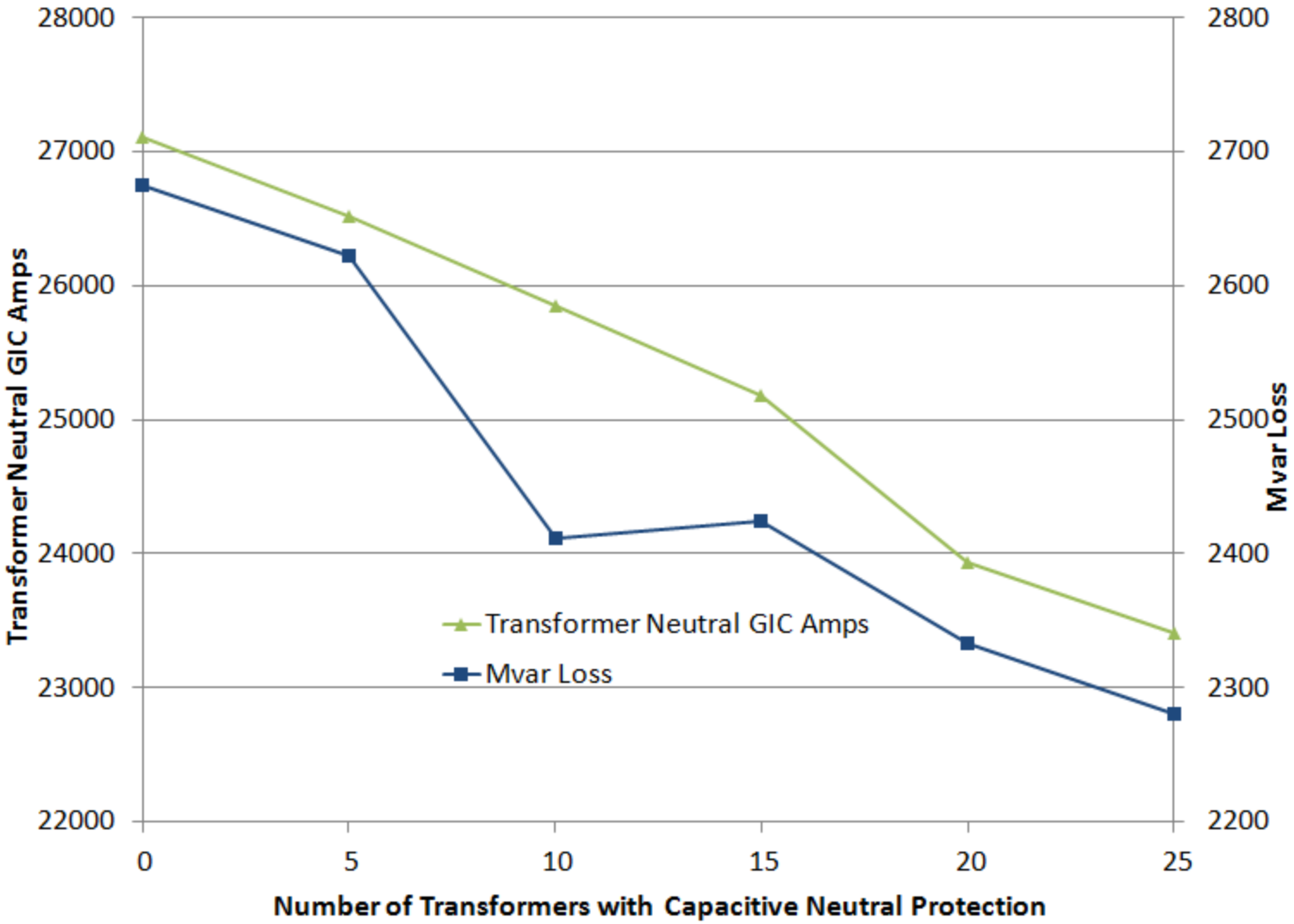

Neutral Blocking Devices Impact at Station C, Field 20 V/km N-S

GSU Station C Transformers	No Blocking North- South Field	5 Blocked	10 Blocked	15 Blocked
GSU Station C 345/22 #1	818 amps	0 amps	0 amps	0 amps
GSU Station C 345/22 #2	826 amps	0 amps	0 amps	0 amps
GSU Station C 345/138 #1	50. amps	275 amps	534 amps	775 amps
GSU Station C 345/138 #2	154 amps	833 amps	0 amps	0 amps
GSU Station C 345/138 #3	51 amps	277 amps	539 amps	0 amps
GSU Station C 138/69 #1	13 amps	193 amps	385 amps	563 amps
Total Current at Station C	1,912 Amps	1,578 Amps	1,458 Amps	1,338 Amps

100 Year Geo-Electric Field Magnitudes for 4,800 nT/min Storm

Area in NA	Southern States (AL, GA, NC, SC, TN)	British Col.	WI, MI, VT, NH, Ont., Quebec	Lower NY, NJ, Eastern PA
100 Year Geo- E. Field J. Kappenman,	4.8 V/km	4.4 V/km	15.2 V/km	31.2 V/km
Area in NA		**British Col.**	**Quebec**	
100 Year Geo-E. Field A. Pulkkinen et.al.,		5 V/km (3 to 15 V/km)	20 V/km (10 to 50 V/km)	

Estimates from J. Kappenman are from MetTech Report # 319, 2010 scaled up to 4,800 nT/min.
Estimates from A. Pulkkinen et.al. are from Space Weather publication in 2012

American Transmission Co. (ATC) Installation Plans

- ATC is installing a SolidGround™ (SG-22) system at their Morgan sub-station in northern Wisc.
- ATC plans to gain on-line experience of neutral GIC blocking during future GMD events
- Results will be used to determine ATCs future directions w.r.t. GMD mitigation planning
- Reports will be shared with the appropriate NERC committees, EPRI and the power industry

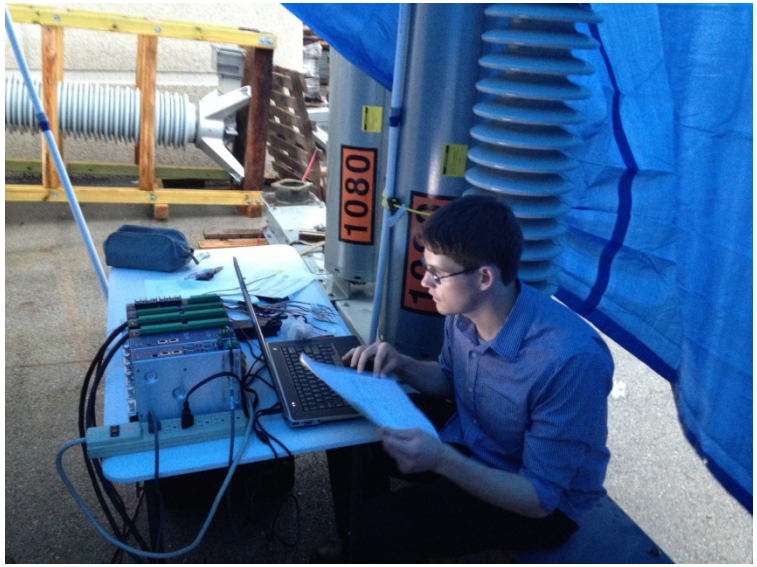

SEL Control Electronics Tested with Solid Ground system in Wisconsin

Helping to **keep the lights on**,
businesses running and communities strong®

AMERICAN TRANSMISSION COMPANY®

July/August IEEE Power & Energy

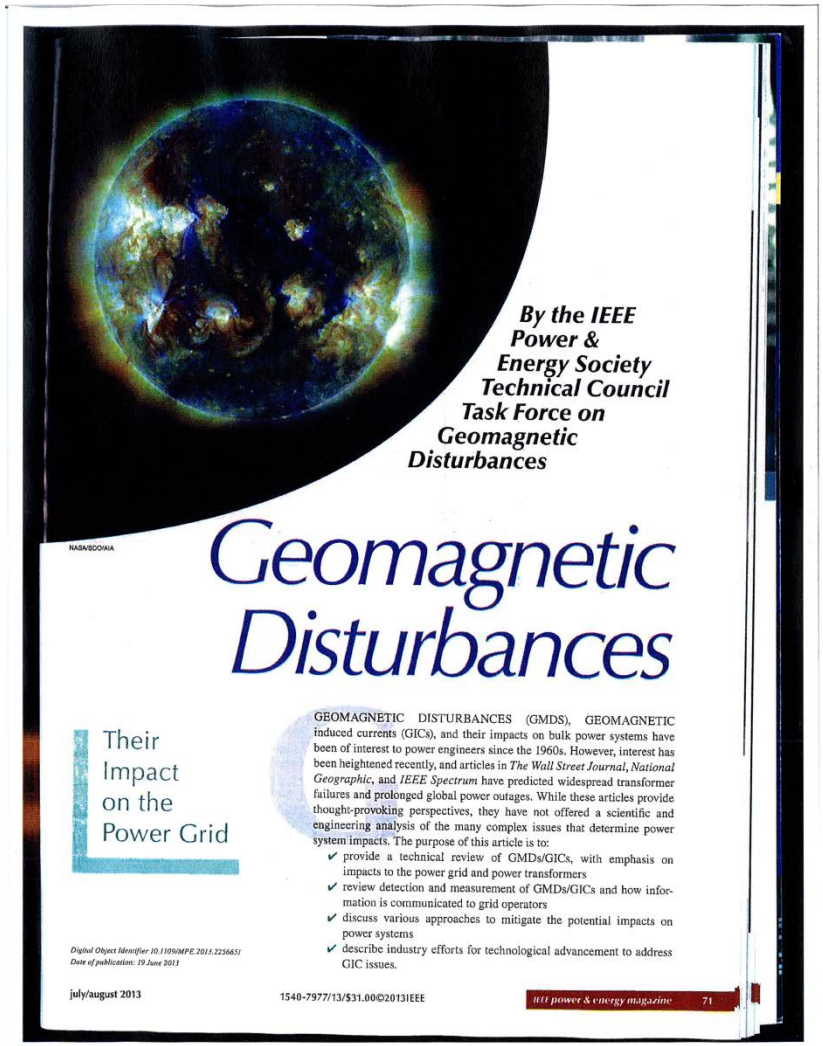

By the IEEE Power & Energy Society Technical Council Task Force on Geomagnetic Disturbances

NASA/SDO/AIA

Geomagnetic Disturbances

Their Impact on the Power Grid

GEOMAGNETIC DISTURBANCES (GMDS), GEOMAGNETIC induced currents (GICs), and their impacts on bulk power systems have been of interest to power engineers since the 1960s. However, interest has been heightened recently, and articles in *The Wall Street Journal*, *National Geographic*, and *IEEE Spectrum* have predicted widespread transformer failures and prolonged global power outages. While these articles provide thought-provoking perspectives, they have not offered a scientific and engineering analysis of the many complex issues that determine power system impacts. The purpose of this article is to:

- ✔ provide a technical review of GMDs/GICs, with emphasis on impacts to the power grid and power transformers
- ✔ review detection and measurement of GMDs/GICs and how information is communicated to grid operators
- ✔ discuss various approaches to mitigate the potential impacts on power systems
- ✔ describe industry efforts for technological advancement to address GIC issues.

Digital Object Identifier 10.1109/MPE.2013.2256651
Date of publication: 19 June 2013

1540-7977/13/$31.00©2013IEEE

- Potential for unintended consequences if blocking devices are employed
  - Over voltages can cause surge protection devices to fail
  - Neutral insulation coordination must be evaluated
  - Potential for series resonance and ferro-resonance must be evaluated
  - Blocking device impedance cancelation could increase neutral ground currents
  - GIC could be redirected to other transformers

Responses to IEEE Publication Issues

Issues:

- Over voltages can cause surge protection devices to fail
- Neutral insulation coordination must be evaluated
- Potential for series resonance and ferro-resonance must be evaluated
- Blocking device impedance cancelation could increase neutral ground currents
- GIC could be redirected to other transformers

Responses:

- New Thyrisitor Solid Ground™ system with Spark Gap does not have an expendable protection device
- Neutral insulation coordination studies and analysis show SolidGround™ will not damage a transformer
- Studies performed using typical EHV network show SolidGround™ resonances will not be an issue
- True: SolidGround™ will reduce the impedance by ~ 6% and therefore increase the neutral ground currents by ~ 6%
- True: ABB and Emprimus therefore recommend all transformers at a selected site employ the SolidGround™ neutral blocking system. Total system GIC is reduced as neutral blockers are added to the network

Solid Ground Commercial Status

- ABB has proposed Solid Ground to several potential customers
  - Price for ranges from $210k to $250k depending on the quantity
  - Estimates of contractor installation costs range from $25k to $50k
  - One Solid Ground can protect from one to three transformers

Solid Ground Average Installed Cost Estimate is about $150k per Transformer

SolidGround™ Provides Large Payback Savings

- SolidGround ™ Protection allows Utility Operators to Avoid the so called
  "Non-Economic Dispatch Procedure"

- Huge Annual Savings can be Realized

- "Solar Magnetic Disturbance: An Operator's Wish List," Greg A. Gucchi, PJM, EPRI-EPRI TR-100450:
  - If we responded to every K alert of level 5 or greater, **PJM would have spent over $100 million in excess incremental operating costs**…….The ultimate protection against SMD is mitigation."

SolidGround can support an extended transformer life

Transformer failure rates follow a similar path to many manufactured products.

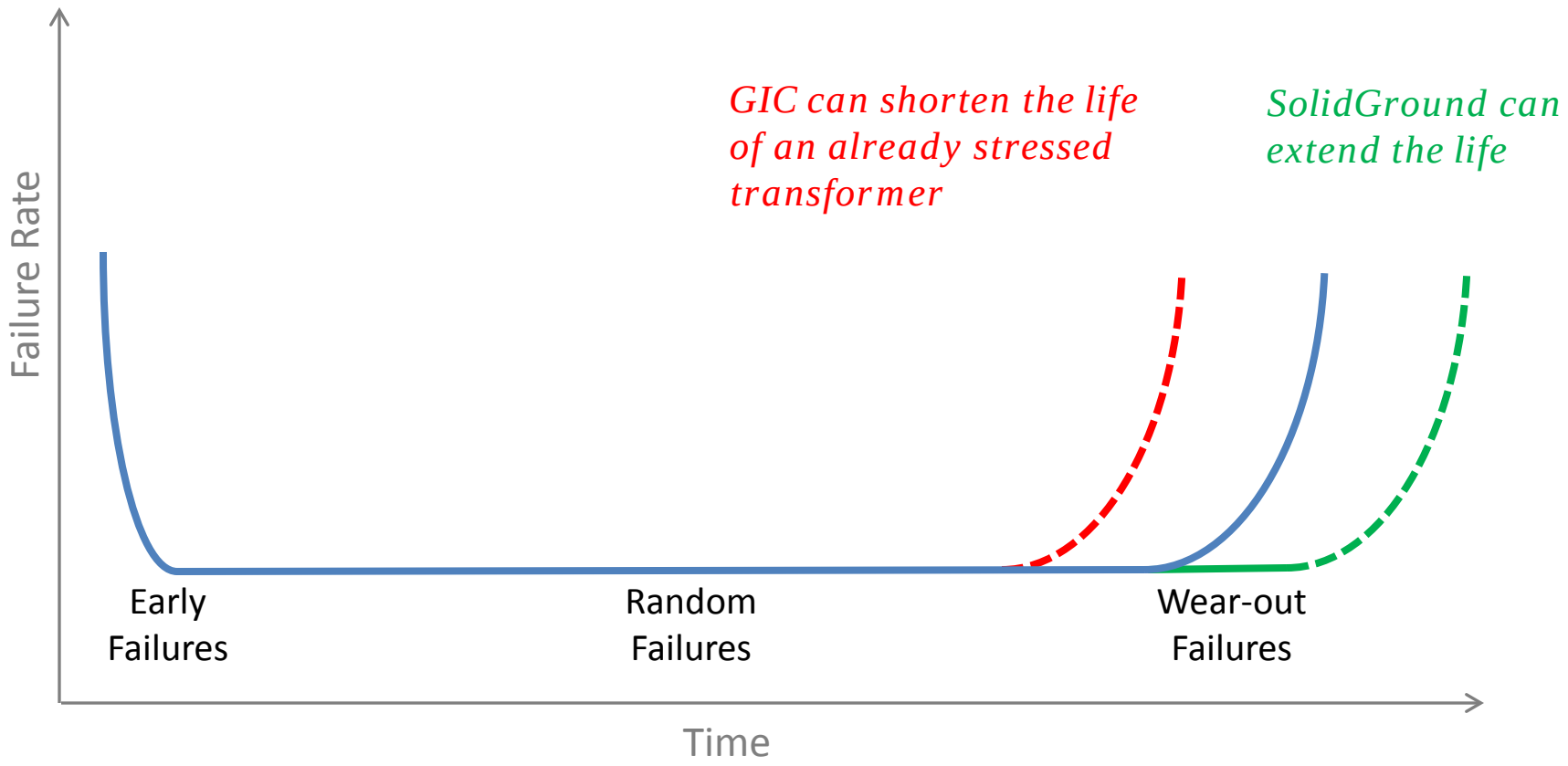

SOLIDGROUND™

ABB

SEL SCHWEITZER ENGINEERING LABORATORIES

Grid Resiliency System

Thanks for Your Attention

Protects the power grid from solar storms and Electromagnetic Pulse (EMP) threats

SolidGround™

Automated protection (with manual overrides)

Transformer is *always* effectively grounded

Uses commercially available components

Option: No expendable components

Laboratory and field verified

Factory assembled; arrives ready to install

Offers financial operating advantages

Applicable to HV transformers, SVC's, station power