Sensitivity Analysis on ATP Modeled Transformers for E3/GIC Predictions

M. Rooney, DTRA

D. Fromme, SARA

G. Edmiston, SARA

A. Walker, SARA

W. M. Grady, Baylor University

August 2013

Distribution A: Approved for public release; distribution is unlimited.

Outline

- Background / Transformers in Saturation
- ATP Models and Methodology:
  - SATURA Transformer Model
  - Parameter Estimation Methodology
  - Hybrid Transformer Model
- Sensitivities
- Summary

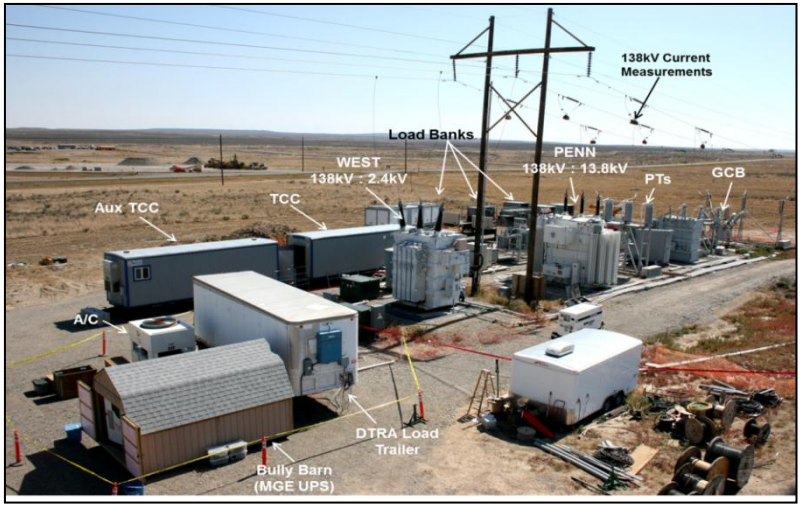

DTRA INL E3 Experiment

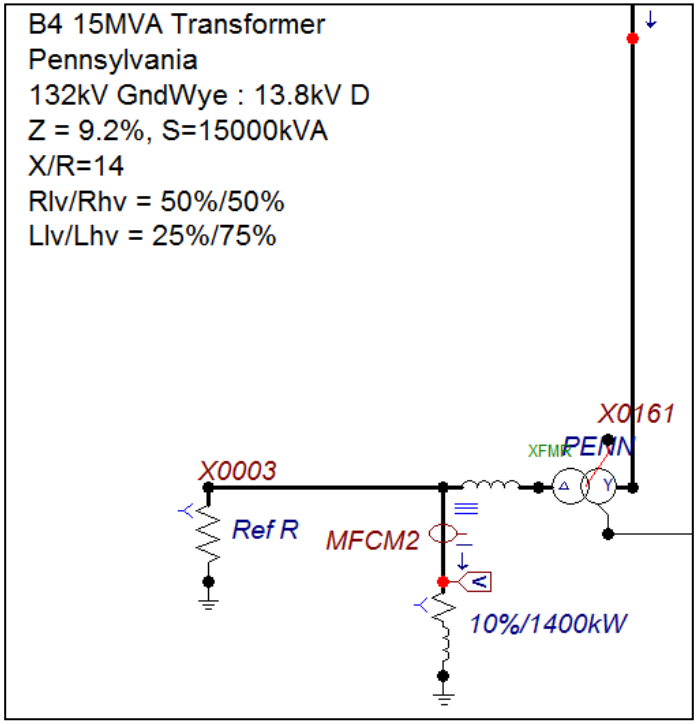

ATP Model of E3 Experiment

Modeling Objective

- Overall Objective: Develop accurate prediction capability for transformer under GIC/E3 stress
  - Develop “accurate” electromagnetic core representation
  - Characterize primary-side impedance collapse
    - > Affects power draw from utility (Reactive and Real)
    - > Affects HV-side harmonics (THD and individuals vs. IEEE-519 Std.)
  - Characterize secondary-side voltage characteristics
    - > Affects 60-Hz voltage sag (passed along to loads/facilities)
    - > Affects LV-side harmonics (passed along to loads/facilities)

- Modeling Code – ATP (Alternative Transients Program)
  - Trapezoidal Integration → “Fast” → Large Grid Sections can be modeled
  - Widely used to analyze power systems for transient response (lightning, etc.)
  - Work from previously vetted (in non-saturated regime) transformer models

Outline

- Background / Transformers in Saturation
- ATP Models and Methodology:
  - SATURA Transformer Model
  - Parameter Estimation Methodology
  - Hybrid Transformer Model
- Sensitivities
- Summary

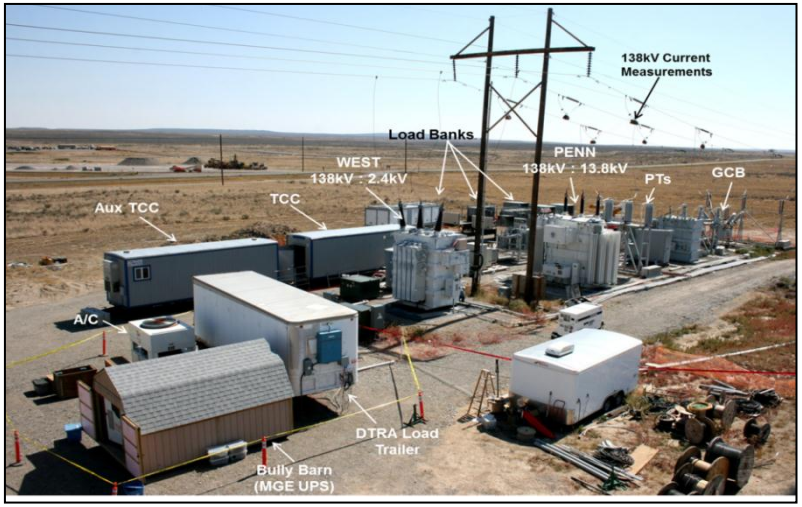

DTRA INL E3 Experiment

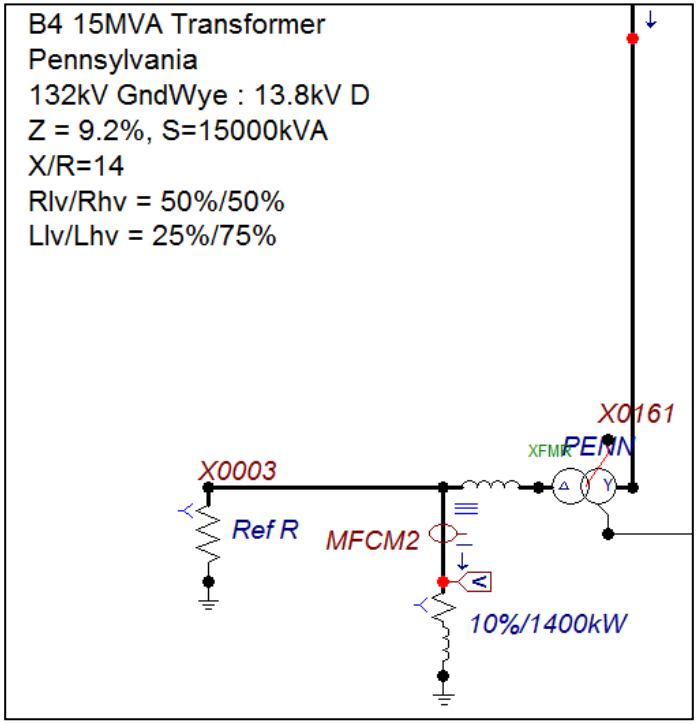

ATP Model of E3 Experiment

ATP Built-in Models

SATURA Model

- 7-pt non-linear magnetizing characteristic
  - Must be fully defined/calculated by user (flux-current, Φ-I)
- Linear loss processes
- All electrical parameters must be inserted in Ω,H,etc.
- Modeled as three “single-phase” cores wired together
  - No flux sharing

Individual Phase Representation

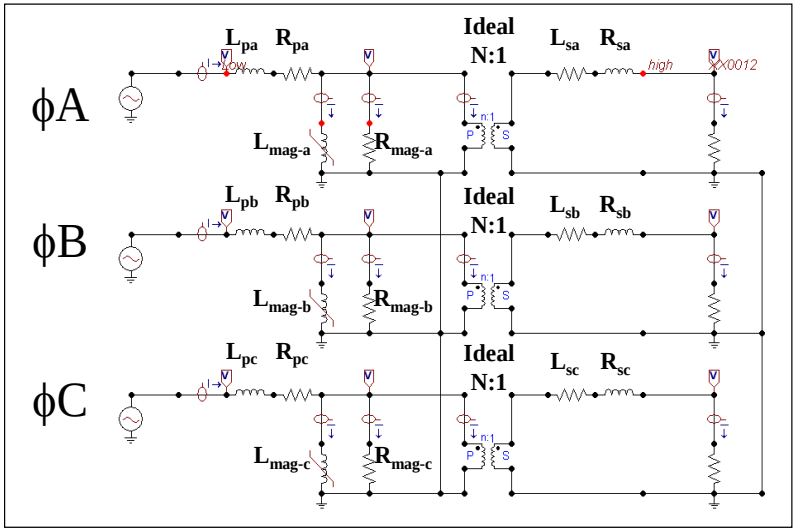

=

Lumped Model

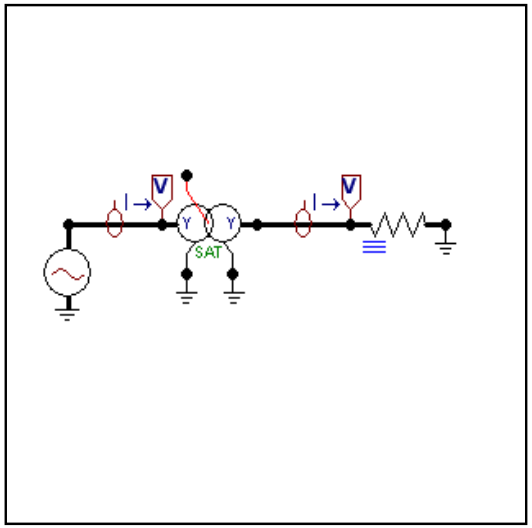

ATP Built-In Models:
Hybrid Model

Hybrid 3-leg Topology

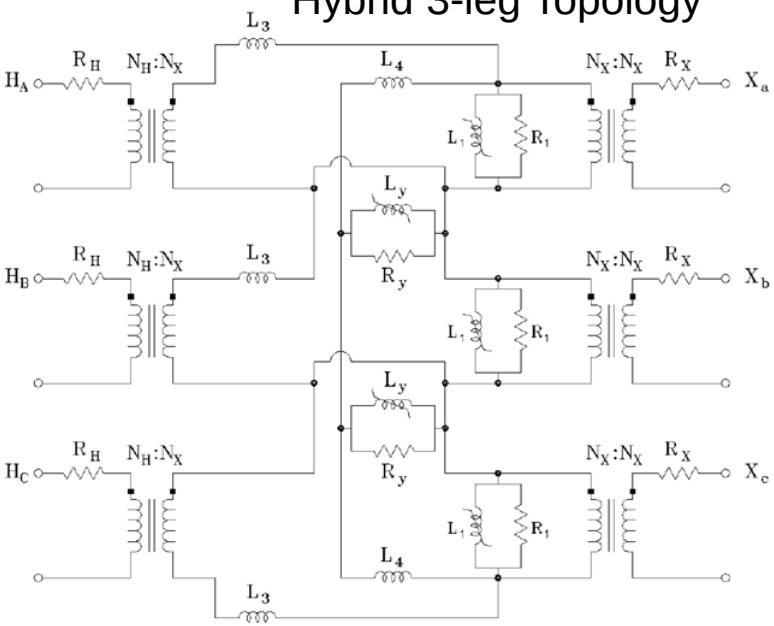

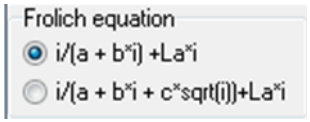

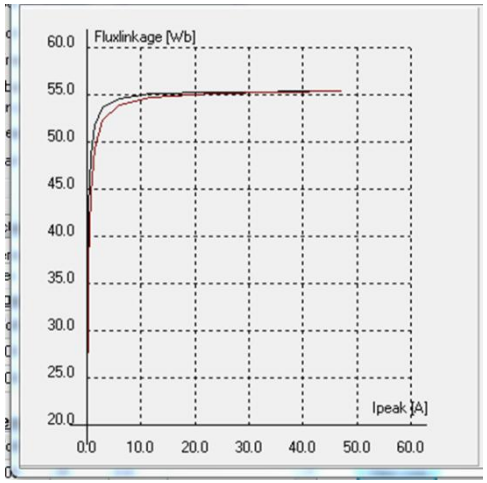

- Topologically correct model developed by Mork, Gonzalez, et. Al.
  - Implementation of "**flux sharing**" 3 and 5-leg models
- Parameter input at the per-unit (%) level rather than Ω,H, etc:
  - Automatic: Based on limited IEEE trend data
  - Manual: Specified as per-unit
- Magnetic circuit fit to Frolich equation from (Voltage, Magnetizing I)

SATURA vs. Hybrid Models

Comparison to Empirical Data

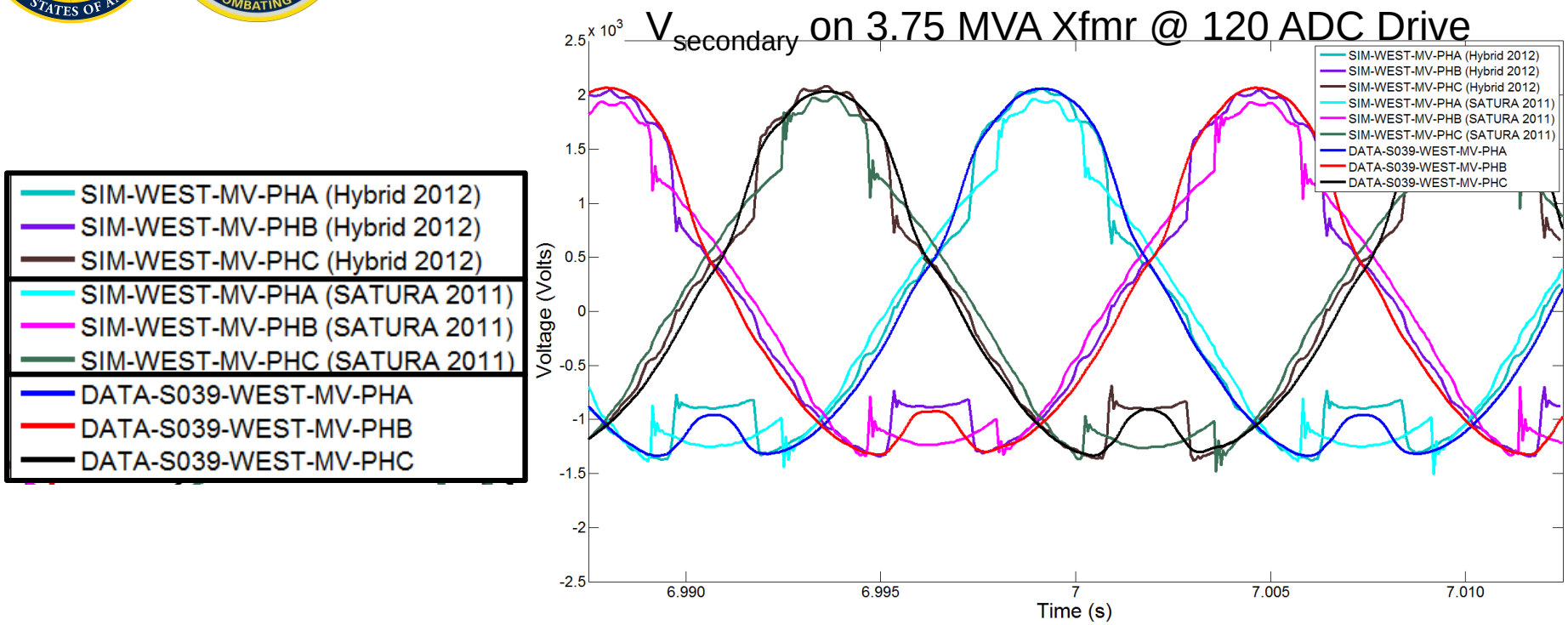

- Topology of Hybrid model increased accuracy of voltage THD and individual harmonic predictions
- Sag w/SATURA model already somewhat accurately predicted
  - To within 1% on 15% V_{fund} sag in 2011 Experiment Data (measured at substation)
  - To within the A/B/C diff. on 2% Sag in 2011 Experiment Data (measured at 138 kV)

SATURA vs. Hybrid Models

Comparison to Empirical Data (Voltage Harmonic)

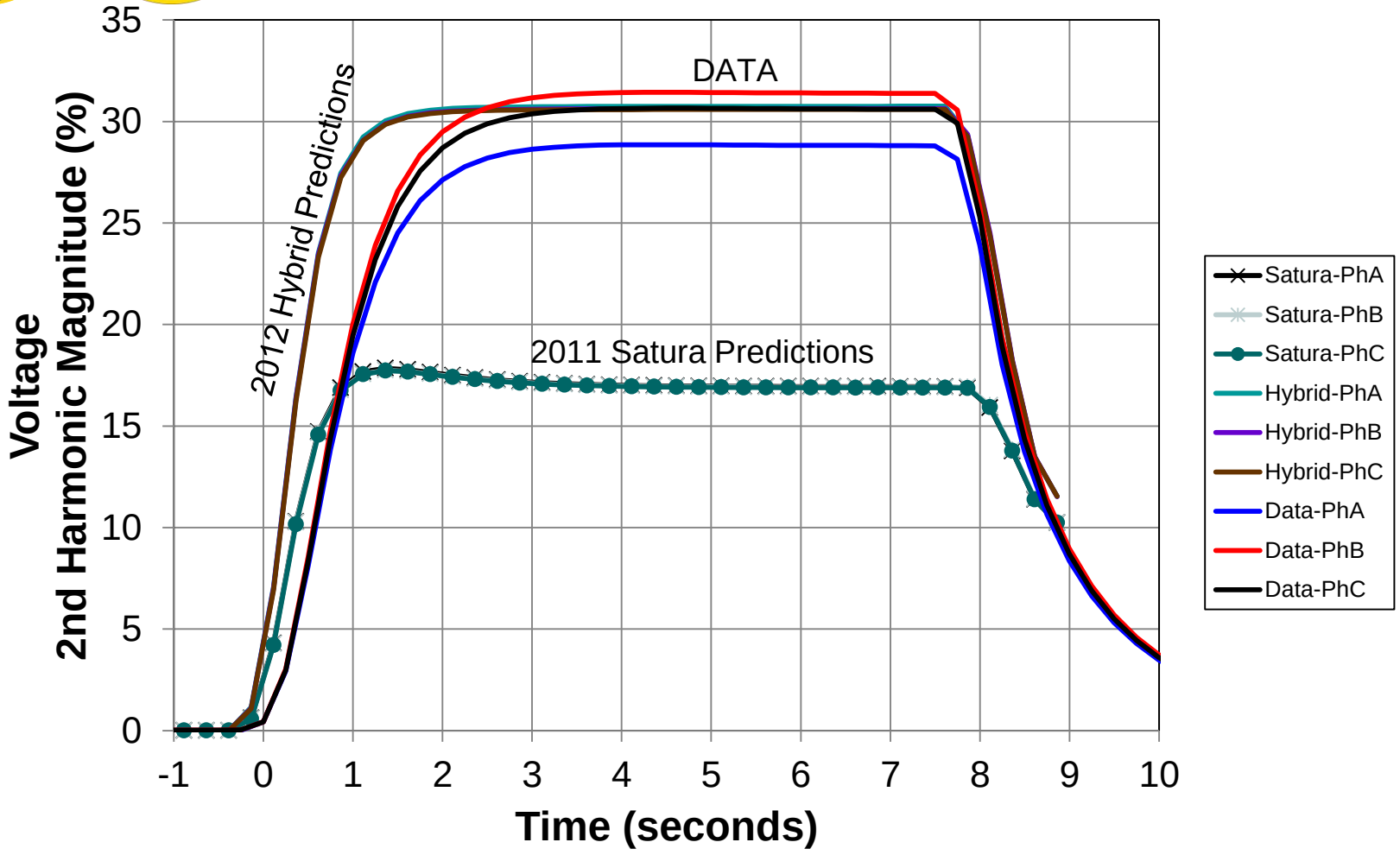

Outline

- Background / Transformers in Saturation
- ATP Models and Methodology:
  - SATURA Transformer Model
  - Parameter Estimation Methodology
  - Hybrid Transformer Model
- Sensitivities
- Summary

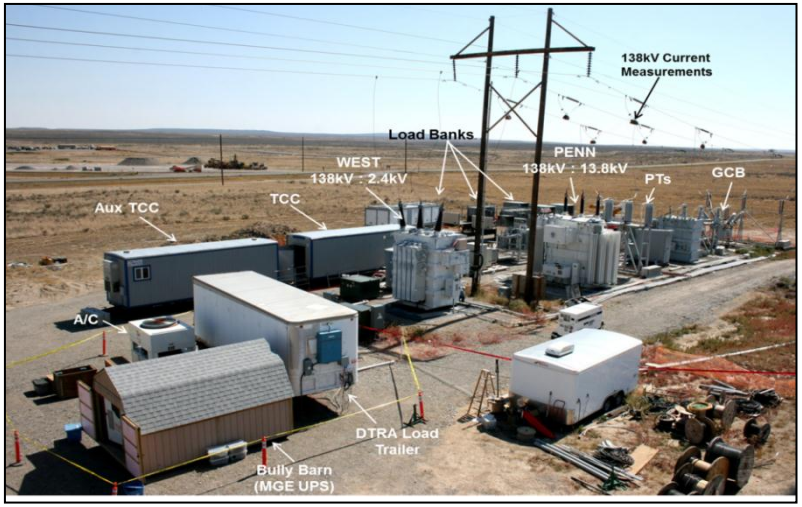

DTRA INL E3 Experiment

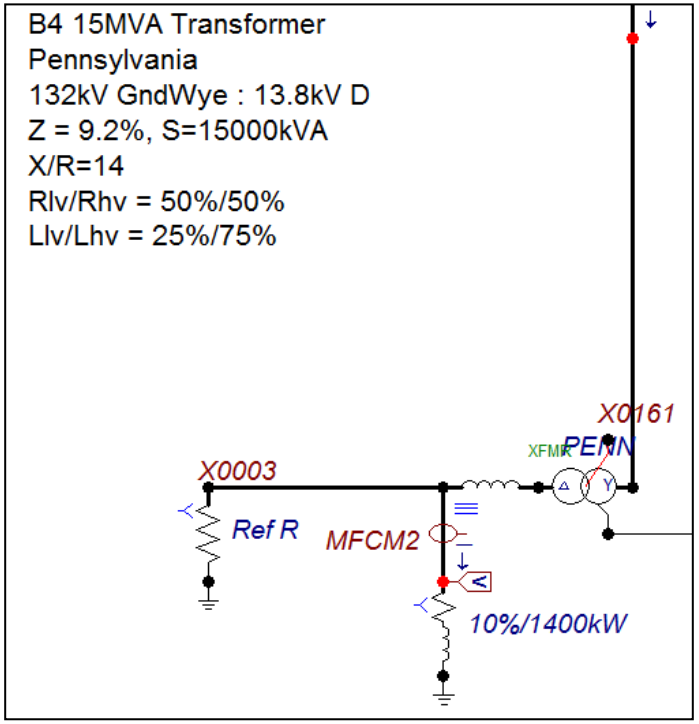

ATP Model of E3 Experiment

Parameter Sensitivities

Within the Hybrid Model

Following Slides Discuss Sensitivity of these Components

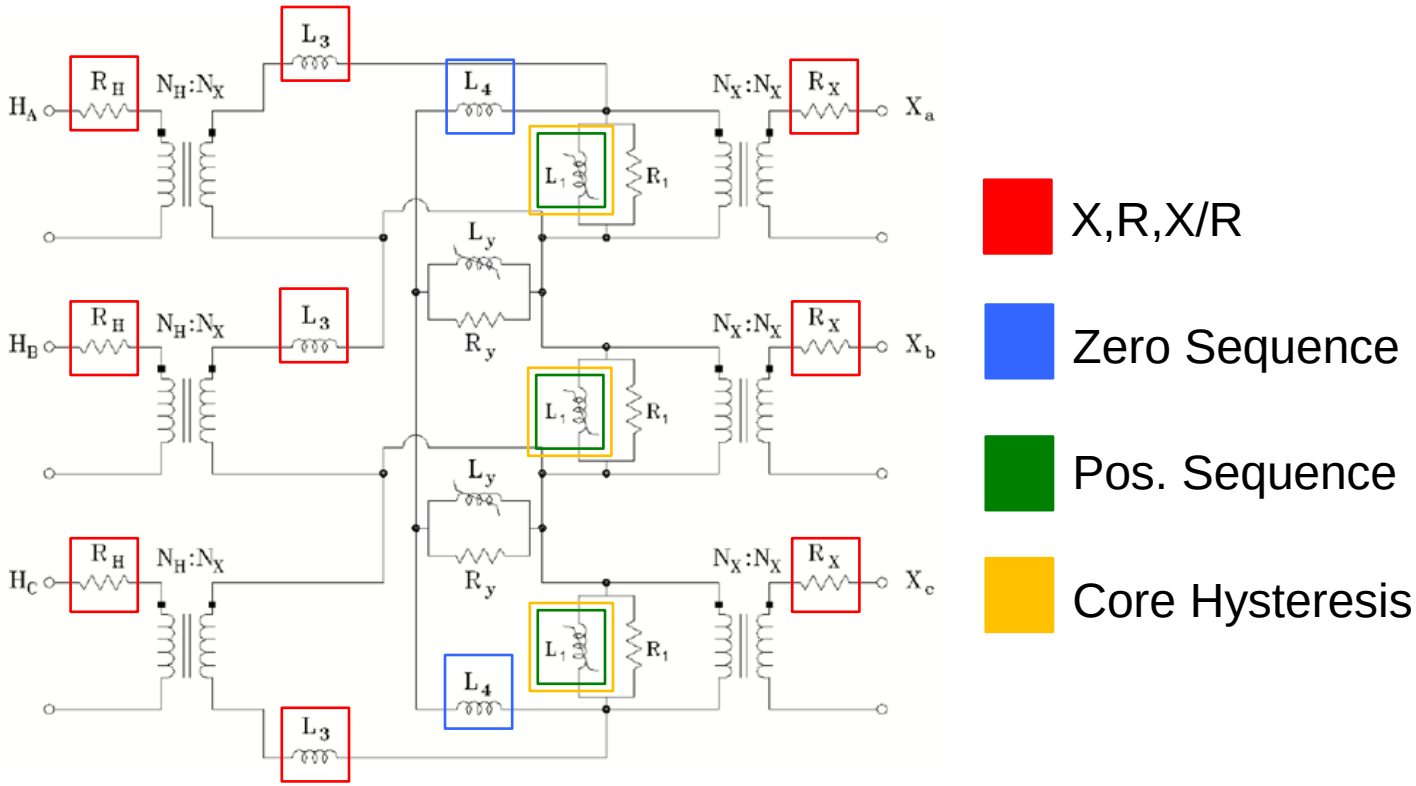

*Metrics for evaluation chosen by “most realistic” load threats of E3 (Primary-side Z collapse, Secondary V_{fund} sag and V_{harm} growth)

Parameter Sensitivities

Within the Hybrid Model

Following Slides Discuss Sensitivity of these Components

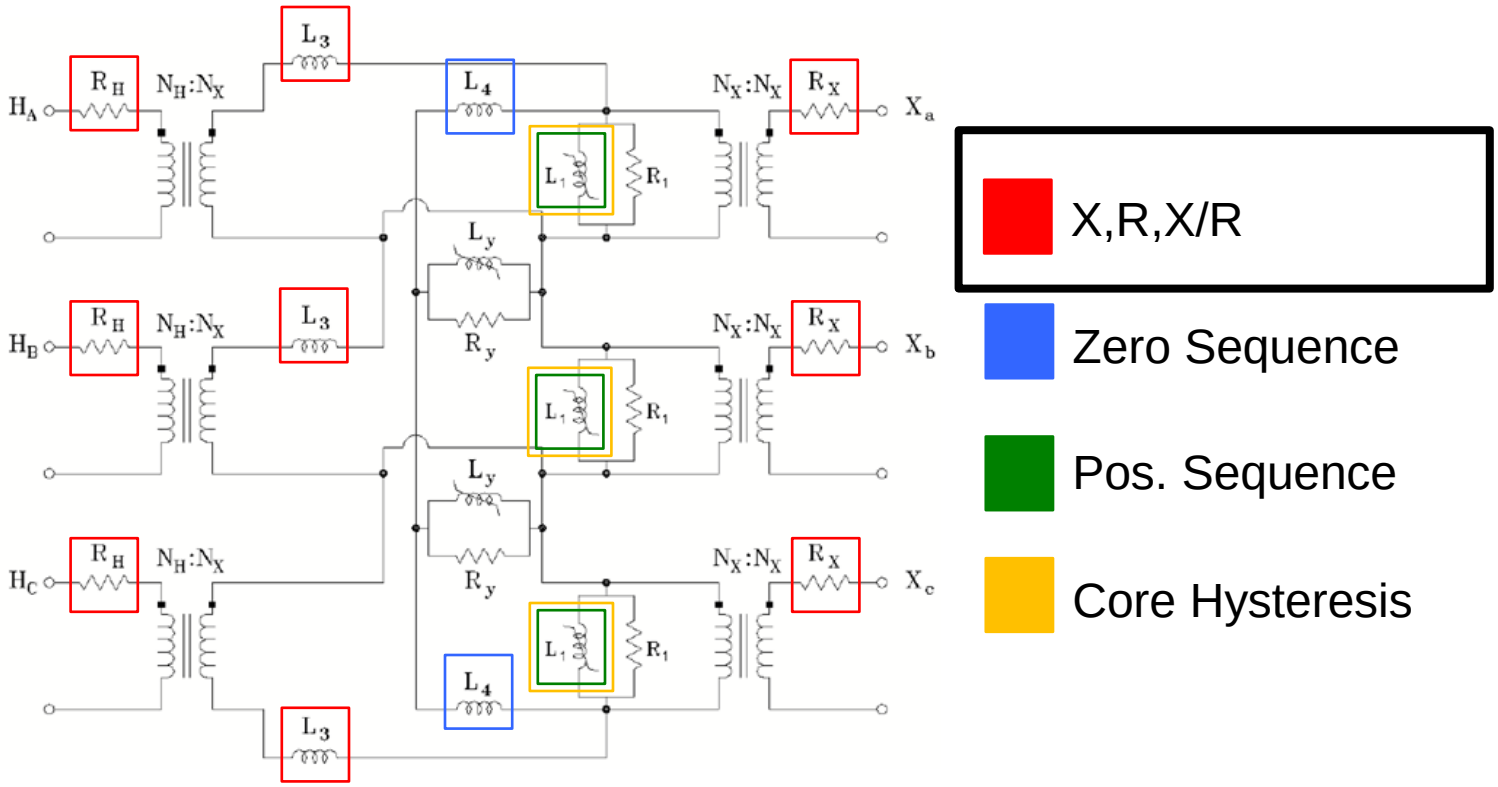

*Metrics for evaluation chosen by “most realistic” load threats of E3 (Primary-side Z collapse, Secondary V_{fund} sag and V_{harm} growth)

Effects of Model X,R,X/R

Saturation of MVA-Level Transmission Transformer

- X, R, X/R: Primary control of DC loop impedance of E3/GIC current
  - Parameter range: from nameplate and X/R trends published in IEEE C37.010-1979

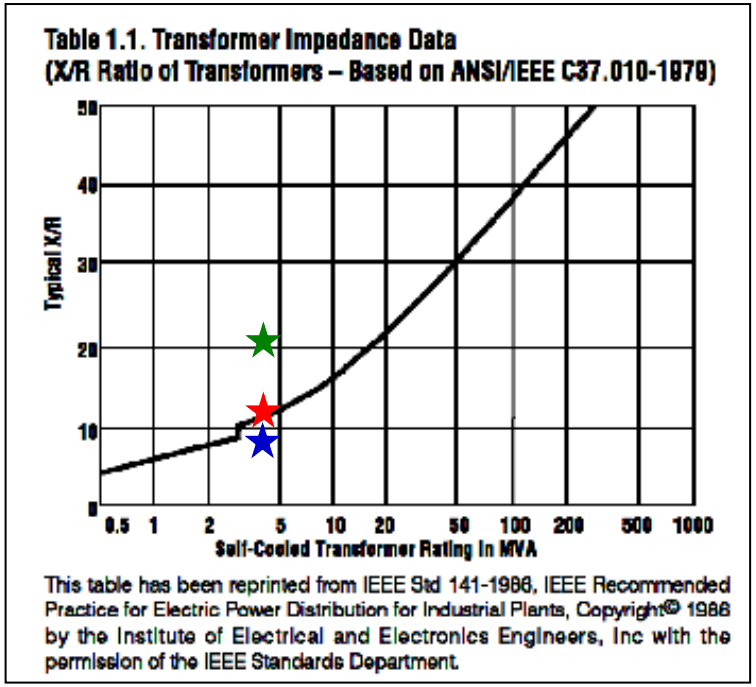

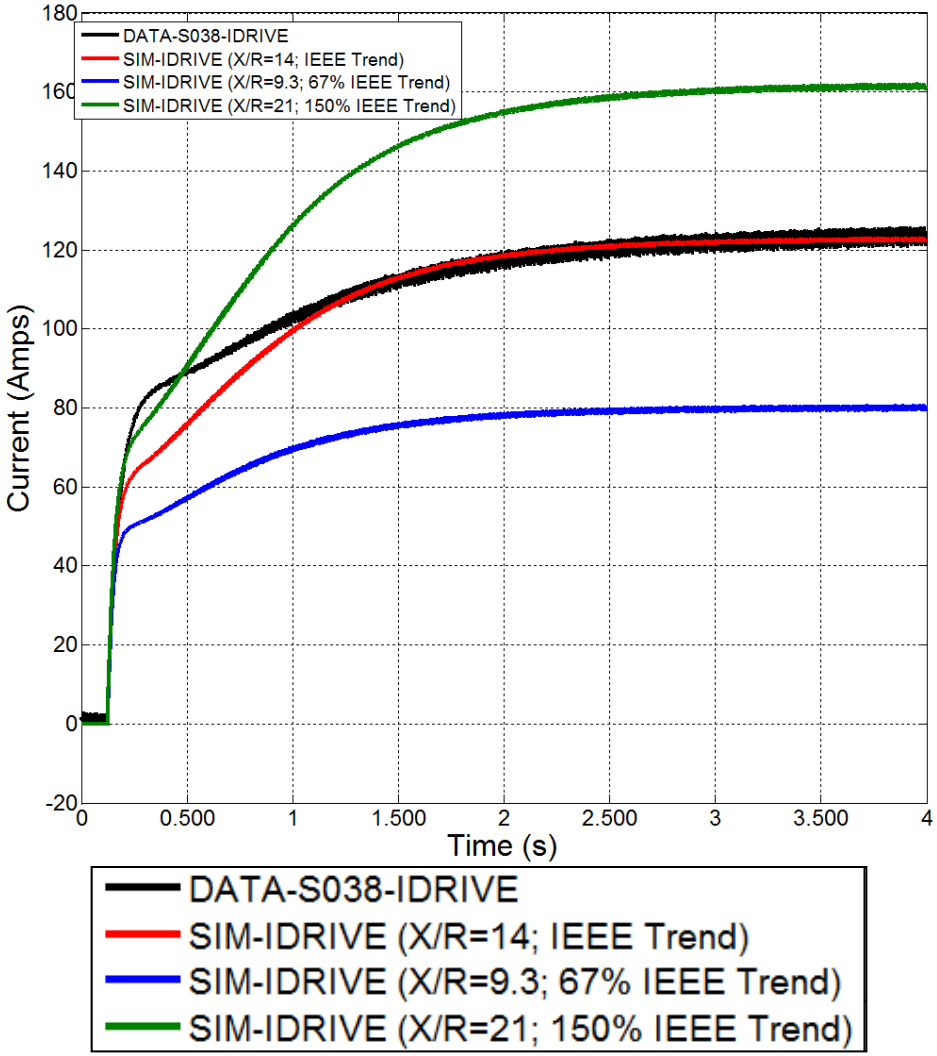

Effects of Model X,R,X/R

Saturation of MVA-Level Transmission Transformer

$V_{secondary}$ on 3.75 MVA Xfmr

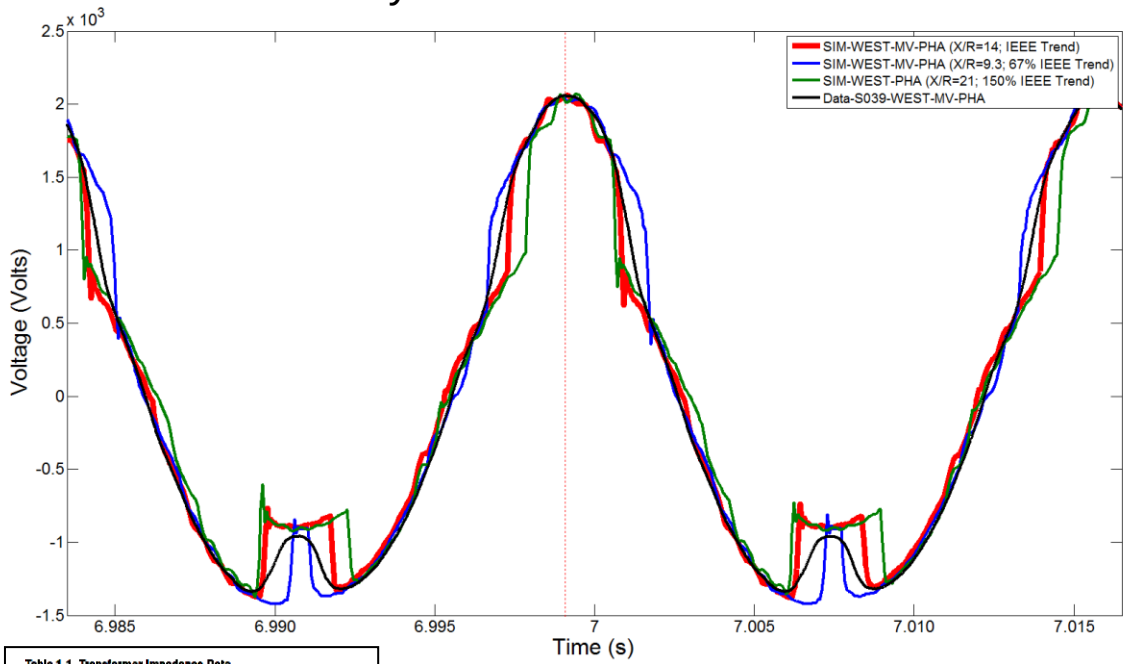

Strongest Harmonic

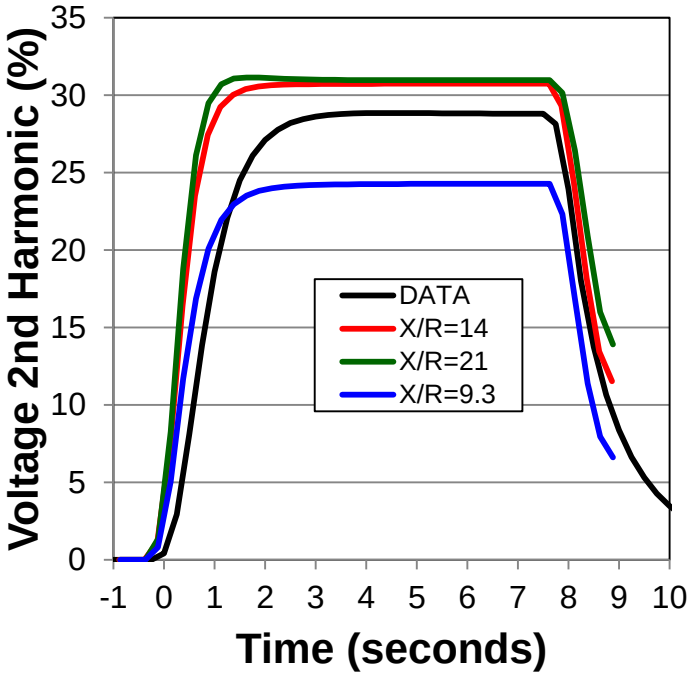

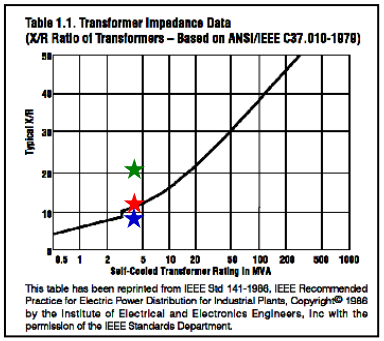

- X/R has modest effect on strong harmonics
  - Not linear relationship
  - X/R from 9.3 to 14 to 21
  - 2nd $V_{harmonic}$ from 24% to 31% to 31%

Parameter Sensitivities

Within the Hybrid Model

Following Slides Discuss Sensitivity of these Components

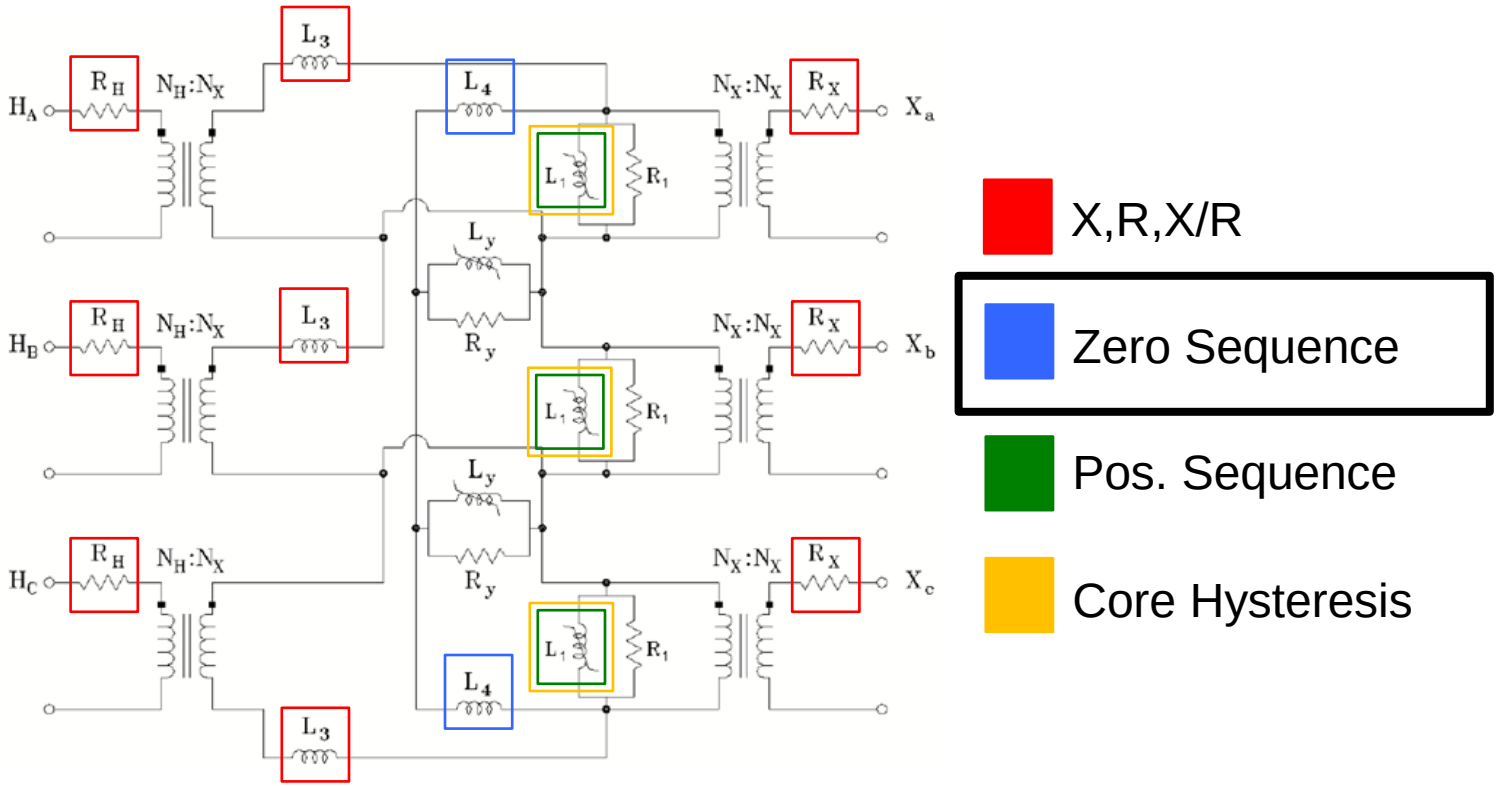

*Metrics for evaluation chosen by "most realistic" load threats of E3 (Primary-side Z collapse, Secondary V_{fund} sag and V_{harm} growth)

Effects of Model Zero Sequence Path

Saturation of MVA-Level Transmission Transformer

Strongest Harmonics

		DATA	SIMULATION		DATA	SIMULATION	
			w/Zero	w/o Zero		w/Zero	w/o Zero
		Steady State Max Harm [%]			Time to Steady State Max (sec)		
2nd	A	28.9	30.6	25.4	~2.8	~1.8	> 8
	B	31.4	30.6	24.5			
	C	30.7	30.6	25.4			
4th	A	5.5	12	3	~6	~3.0	> 8
	B						
	C						

DATA-S039-WEST-MV-PHA
DATA-S039-WEST-MV-PHB
DATA-S039-WEST-MV-PHC
SIM-WEST-MV-PHA (w Zero Seq. Branch)
SIM-WEST-MV-PHB (w Zero Seq. Branch)
SIM-WEST-MV-PHC (w Zero Seq. Branch)
SIM-WEST-MV-PHA (w/o Zero Seq. Branch)
SIM-WEST-MV-PHB (w/o Zero Seq. Branch)
SIM-WEST-MV-PHC (w/o Zero Seq. Branch)

$V_{secondary}$ on 3.75 MVA Xfmr

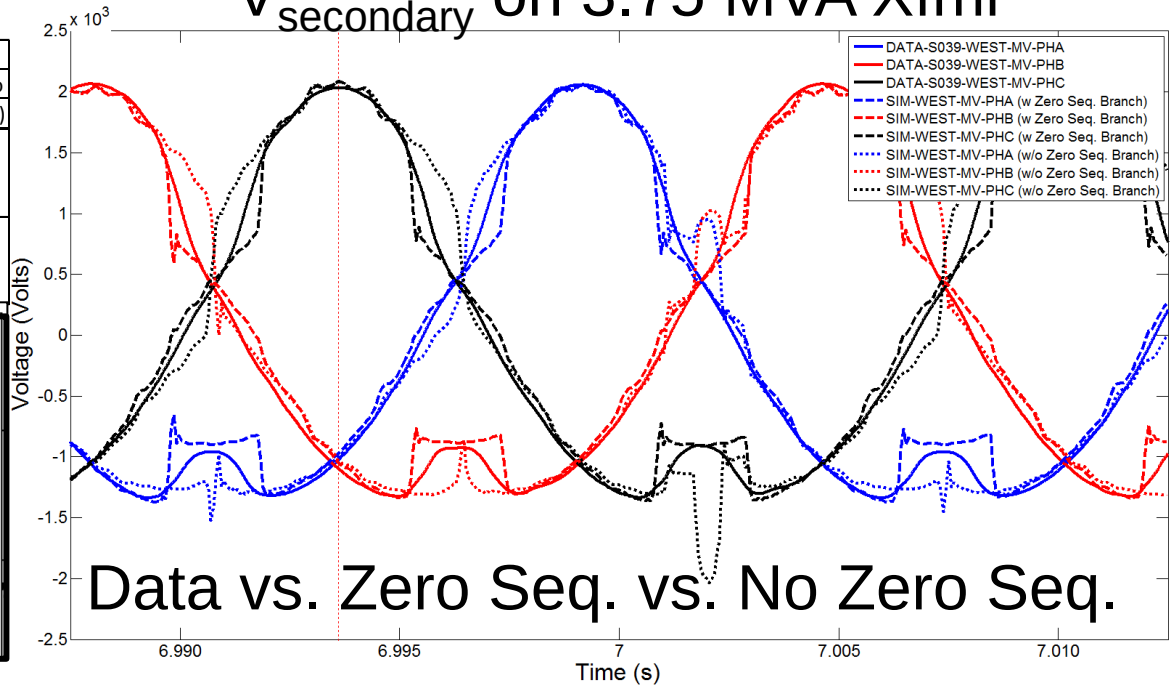

- Zero-sequence pathway enabled is critical to match the data
- Harmonic content relatively insensitive to $|Z_{zero}|$
  - Total Z (Z_{pos}+Z_{zero}) dominated by Z_{pos} term

Effects of Model Zero Sequence Path

Saturation of MVA-Level Transmission Transformer

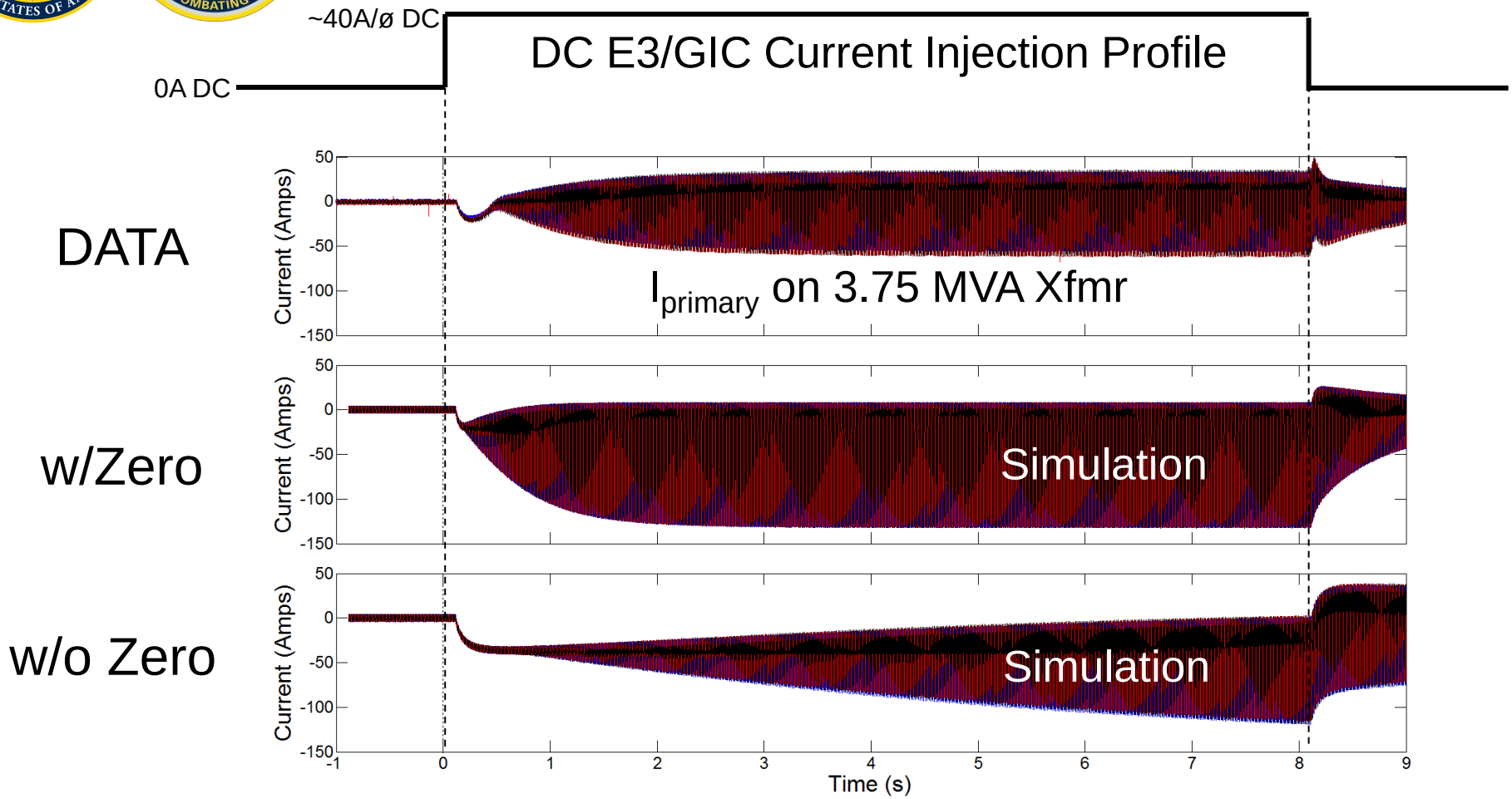

- Collapse of $Z_{primary}$ more accurate w/zero seq. path

Parameter Sensitivities

Within the Hybrid Model

Following Slides Discuss Sensitivity of these Components

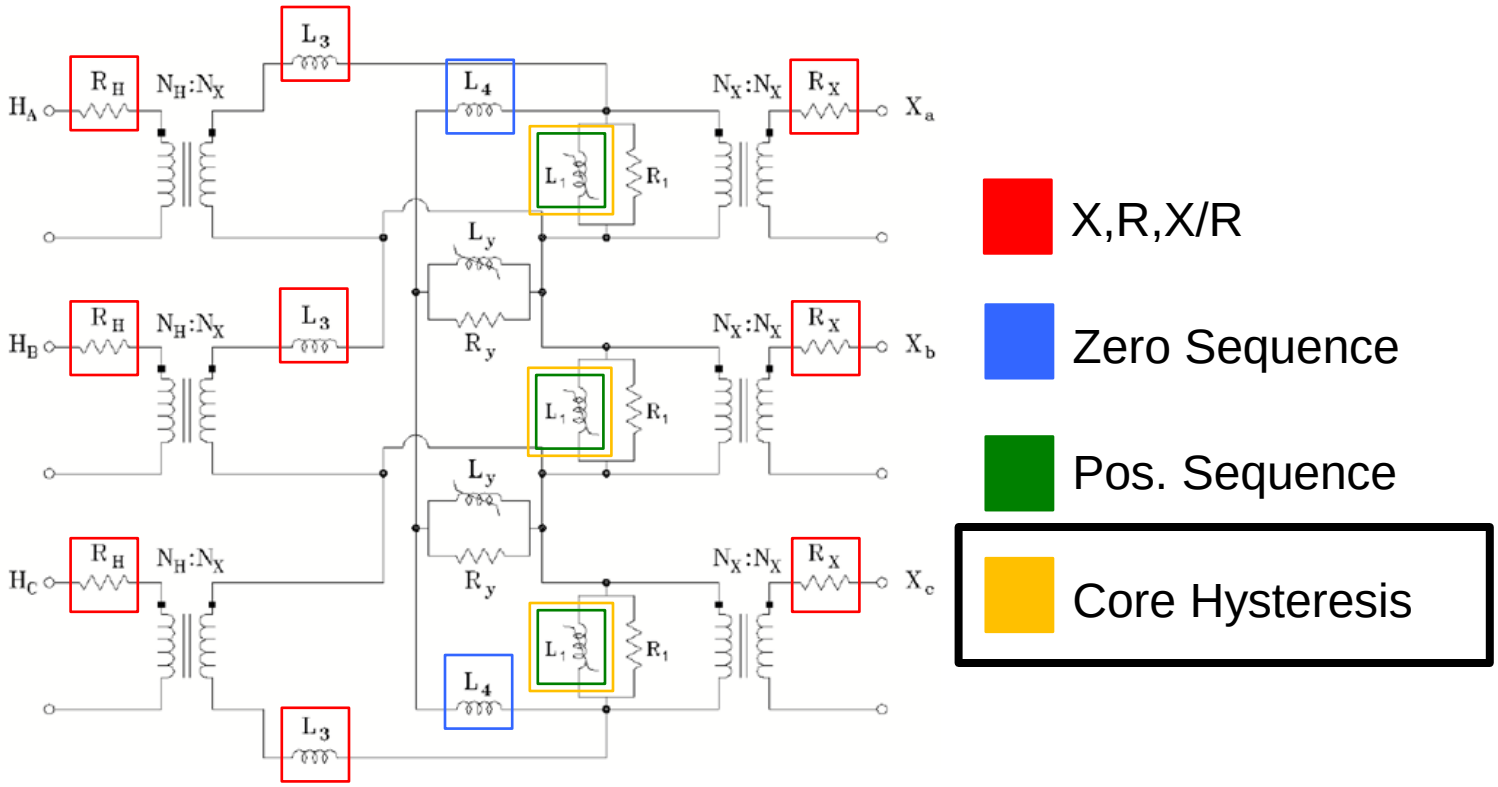

*Metrics for evaluation chosen by "most realistic" load threats of E3 (Primary-side Z collapse, Secondary V_{fund} sag and V_{harm} growth)

Model Hysteresis/Anhysteresis

Saturation of MVA-Level Transmission Transformer

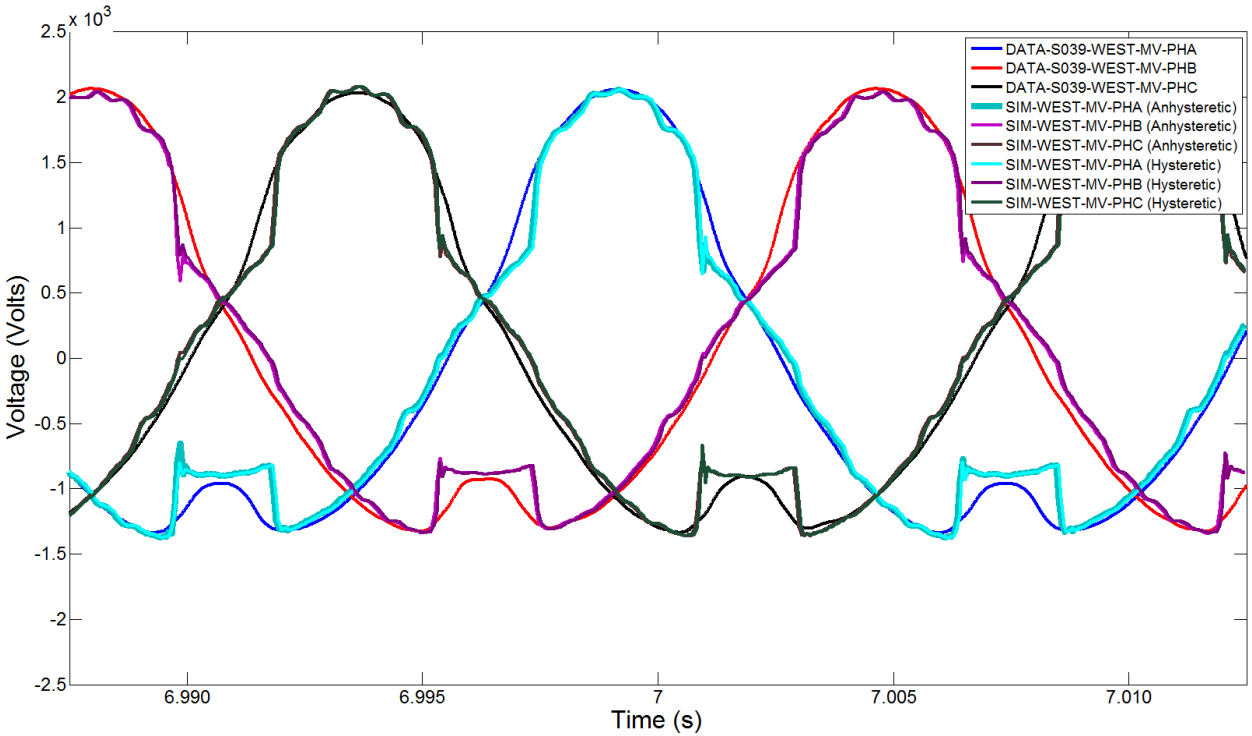

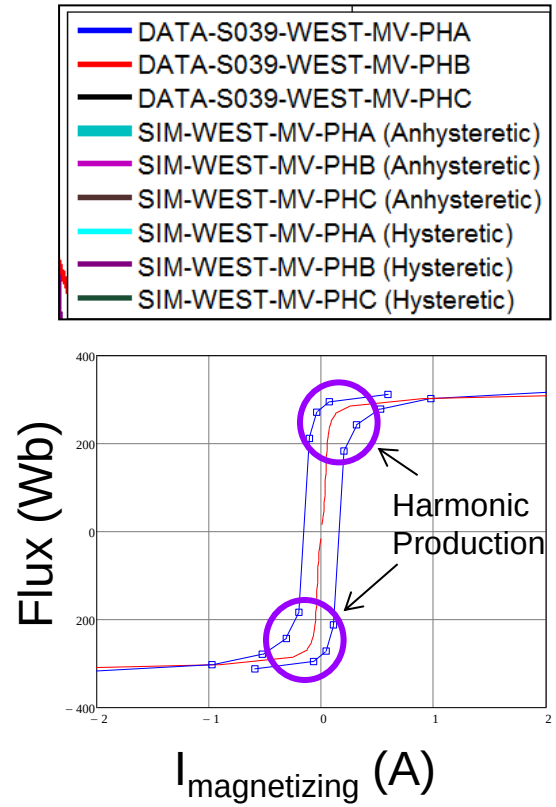

- Hysteretic shape of M-4 steel material has no perceptible effect on secondary voltage sag or harmonics
- Likely due to similarities of dΦ/dI (flux'/current') for hysteretic/anhysteretic

Outline

- Background / Transformers in Saturation
- ATP Models and Methodology:
  - SATURA Transformer Model
  - Parameter Estimation Methodology
  - Hybrid Transformer Model
- Sensitivities
- Summary

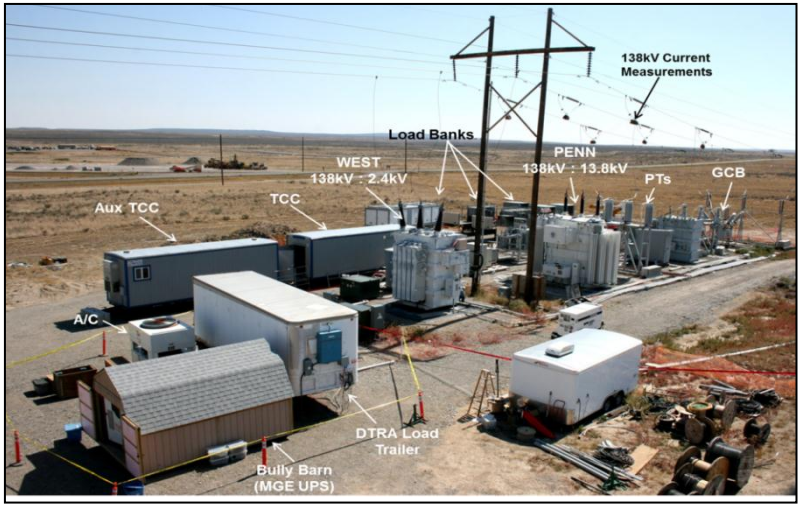

DTRA INL E3 Experiment

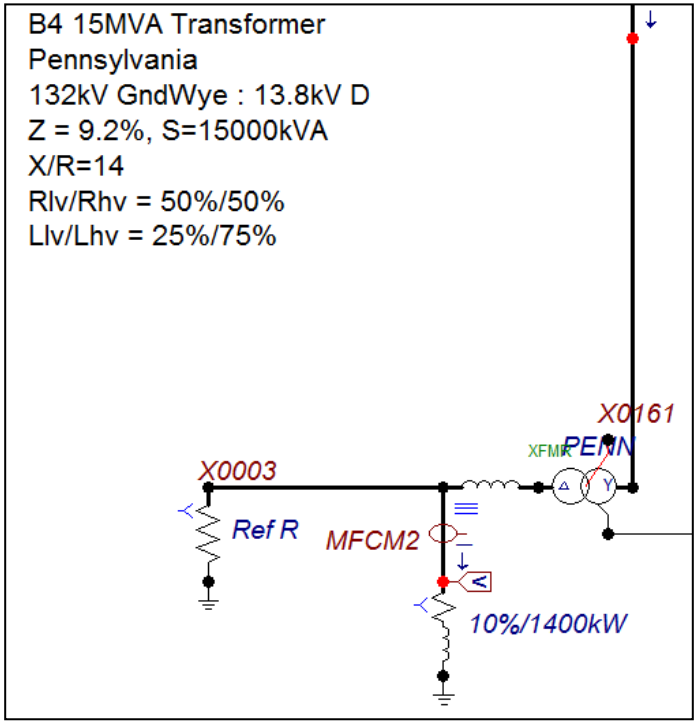

ATP Model of E3 Experiment

Parameter Sensitivity Summary

- ATP-based model methodology developed and compared against empirical data
- Model evolved from SATURA to Hybrid based model as effort focused individual harmonic prediction
- Hybrid Model to E3/GIC Prediction Sensitivities:
  - X, R, X/R: **Primary control DC loop impedance** of E3/GIC current; no large effect on V_{sag}; moderate effect on strong $V_{harmonics}$
  - $I_{magnetizing}$,V% (Zero Sequence): **Pathway important/values not**
  - $I_{magnetizing}$,V% (Positive Sequence): **Primary driver of harmonic content**—describes transition into saturation and magnitude/shape of reactive current draw
  - Anhysteresis,Hysteresis: **No effect on harmonics/sag**
- Sensitivities of source side still under investigation
  - Source-side V_{sag} dependent upon saturating transformer AND source model